REVISION HISTORY BG3R CHASSIS

MMODEL

KV-XJ29M50
KV-XJ29M61

PART NO.: 9-872-268-01

NO	DATE	DESCRIPTION OF REVISION

Self Diagnosis
Supported model

SERVICE MANUAL BG3R CHASSIS

MODEL	COMMANDER	DEST.	CHASSIS NO.	MODEL	COMMANDER	DEST.	CHASSIS NO.
KV-XJ29M50	RM-952	GE	SCC-U52F-A				
KV-XJ29M61	RM-952	GE	SCC-U52E-A				

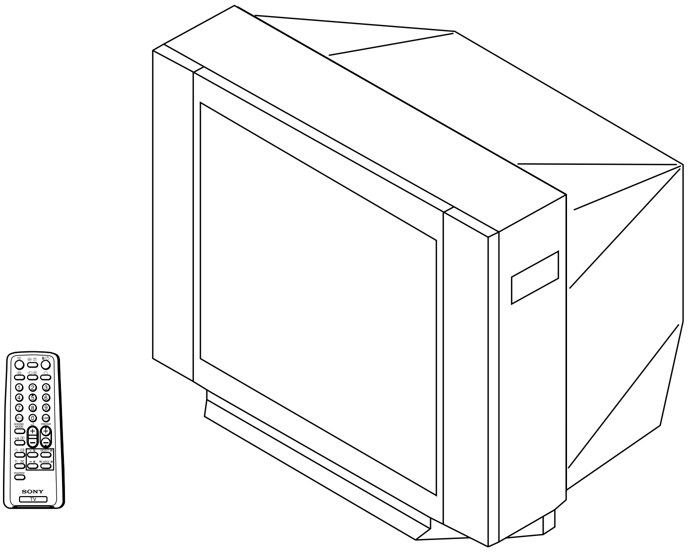

TRINITRON ® COLOR TV
SONY ®

SPECIFICATIONS

			Note
Power requirements	110-240 V AC, 50/60 Hz		
Power consumption (W)	Indicated on the rear of the TV		
Television system	B/G, I, D/K, M		
Color system	PAL, PAL 60, SECAM, NTSC3.58, NTSC4.43		
Stereo/Bilingual system	NICAM Stereo/Bilingual B/G, I, D/K; A2 Stereo/Bilingual B/G		KV-XJ29M61 only
Teletext Language	English, Arabic, French		KV-XJ29M61 only
Channel coverage **B/G**	VHF: E2 to E12 UHF: E21 to E69 CATV: S01 to S03, S1 to S41		
I	UHF: B21 to B68 CATV: S01 to S03, S1 to S41		
D/K	VHF: C1 to C12, R1 to R12 UHF: C13 to C57, R21 to R60 CATV: S01 to S03, S1 to S41, Z1 to Z39		
M	VHF: A2 to A13 UHF: A14 to A79 CATV: A-8 to A-2, A to W+4, W+6 to W+84		
(Antenna)	75-ohm external terminal		
Audio output (Speaker)	5W + 5W		
Number of terminal **Video**	Input: 3* Output: 1	Phono jacks; 1 Vp-p, 75 ohms	
Audio	Input: 3* Output: 1	Phono jacks; 500 mVrms	
(Component Video)	Input: 1	Phono jacks; Y : 1 Vp-p, 75 ohms, sync negative CB : 0.7 Vp-p, 75 ohms CR : 0.7 Vp-p, 75 ohms Audio : 500 mVrms	
(Headphone)	Output: 1	Stereo minijack	
Picture tube	29 in.		
Tube size (cm)	72		Measured diagonally
Screen size (cm)	68		Measured diagonally
Dimension (w/h/d, mm)	794 x 573 x 517		
Mass (kg)	49		

Design and specifications are subject to change without notice.

CAUTION

SHORT CIRCUIT THE ANODE OF THE PICTURE TUBE AND THE ANODE CAP TO THE METAL CHASSIS, CRT SHIELD, OR CARBON PAINTED ON THE CRT, AFTER REMOVING THE ANODE.

SAFETY-RELATED COMPONENT WARNING!!

COMPONENTS IDENTIFIED BY SHADING AND MARK ⚠ ON THE SCHEMATIC DIAGRAMS, EXPLODED VIEWS AND IN THE PARTS LIST ARE CRITICAL TO SAFE OPERATION. REPLACE THESE COMPONENTS WITH SONY PARTS WHOSE PART NUMBERS APPEAR AS SHOWN IN THIS MANUAL OR IN SUPPLEMENTS PUBLISHED BY SONY.

TABLE OF CONTENTS

Section *Title* *Page*

SELF DIAGNOSTIC FUNCTION 4

1. GENERAL 7

2. DISASSEMBLY
2-1. Rear Cover Removal 21
2-2. Speaker Removal 21
2-3. Chassis Assy Removal 21
2-4. Service Position 21
2-5. Replacement of Parts 21
2-5-1. Replacement of Multi Button 21
2-5-2. Replacement of Light Guide 21
2-6. J4 Board and Treminal Bracket Removal 22
2-7. D3 Board Removal 22
2-8. V1 Board Removal 22
2-9. H5 Board Removal 22
2-10. A and B9 Boards Removal 22
2-11. Picture Tube Removal 23
2-12. Removal of Anode Cap 23

3. SET-UP ADJUSTMENTS
3-1. Beam Landing 24
3-2. Convergence 25
3-3. Focus Adjustment 27
3-4. G2 (Screen) and White Balance Adjustments 27

4. CIRCUIT ADJUSTMENTS
4-1. Adjustment With Commander 28
4-2. Adjustment Method 28
4-3. Picture Quality Adjustment 33
4-4. Deflection Adjustment 33
4-5. H-Trapezoid Adjustment 33
4-5. A Board Ajustment After IC003 (Memory) Replacement 33
4-6. Picture Distortion Adjustment 34

Section *Title* *Page*

5. DIAGRAMS
5-1. Block Diagram 35
5-2. Circuit Boards Location 37
5-3. Schematic Diagrams 38
(1) Schematic Diagrams of B9 Board 39
(2) Schematic Diagram of A Board 41
(3) Schematic Diagram of C6 Board 45
(4) Schematic Diagram of H5 Board 47
(5) Schematic Diagram of V1 Board 49
(6) Schematic Diagram of VM1 Board 51
(7) Schematic Diagram of D3 Board 52
(8) Schematic Diagram of J4 Board 53
5-4. Voltage Measurements 54
5-5. Waveforms 57
5-6. Printed Wiring Boards and Parts Location 58
5-7. Semiconductors 64

6. EXPLODED VIEWS
6-1. Speaker Bracket 66
6-2. Chassis 67
6-3. Picture Tube 68

7. ELECTRICAL PARTS LIST 69

SELF DIAGNOSTIC FUNCTION

The units in this manual contain a self-diagnostic function. If an error occurs, the STANDBY/TIMER lamp will automatically begin to flash.
The number of times the lamp flashes translates to a probable source of the problem. A definition of the STANDBY/TIMER lamp flash indicators is listed in the instruction manual for the user's knowledge and reference. If an error symptom cannot be reproduced, the remote commander can be used to review the failure occurrence data stored in memory to reveal past problems and how often these problems occur.

1. DIAGNOSTIC TEST INDICATORS

When an errors occurs, the STANDBY/TIMER lamp will flash a set number of times to indicate the possible cause of the problem. If there is more than one error, the lamp will identify the first of the problem areas.

Result for all of the following diagnostic items are displayed on screen. No error has occured if the screen displays a "0".

Diagnostic Item Description	No. of times STANDBY/TIMER lamp flashes	Self-diagnostic display/Diagnostic result	Probable Cause Location	Detected Symptoms
• Power does not turn on	Does not light	—	• Power cord is not plugged in. • Fuse is burned out F8601 (B9)	• Power does not come on. • No power is supplied to the TV. • AC power supply is faulty.
• +B overcurrent (OCP) or overvoltage (OVP) • Vertical deflection stopped • Horizontal deflection overdrive	2 times	002:000 or 002:001~255 003:001~255 004:001~255 at the same time	• H.OUT Q511 is shorted. (A board) • IC1800 is shorted. (C6 board) • -13V is not supplied. (A board) • IC 503 faulty (A board)	• Power does not come on. • Load on power line is shorted. • Has entered standby state after horizontal raster. • Vertical deflection pulse is stopped. • Power line is shorted or power supply is stopped.
• White balance failure (no PICTURE)	5 times	005:000 or 005:001~225	• G2 is improperly adjusted. (Note 2) • CRT problem. • Video OUT is faulty. (C6 board) • IC301 is faulty. (A board) • No connection A board to C6 board.	• No raster is generated. • CRT cathode current detection reference pulse output is small.
• Micro reset	—	101:00 or 101:001~225	• Discharge CRT (C6 Board) • Static discharge • External noise	• Power is shut down shortly, after this return back to normal. • Detect Micro latch up.

Note 1: If a + B overcurrent is detected, stoppage of the vertical deflection is detected simultaneously.
The symptom that is diagnosed first by the microcontroller is displayed on the screen.
Note 2: Refer to screen (G2) Adjustment in section 3-4 of this manual.

2. DISPLAY OF STANDBY/TIMER LIGHT FLASH COUNT

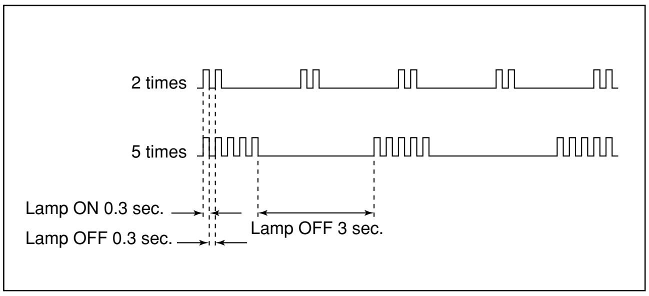

Diagnostic Item	Flash Count*
+B overcurrent/overvoltage Vertical deflection stopped	2 times
White balance failure	5 times

* One flash count is not used for self-diagnostic.

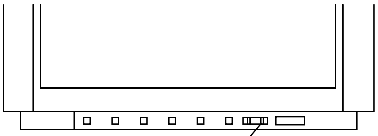

3. STOPPING THE STANDBY/TIMER FLASH

Turn off the power switch on the TV main unit or unplug the power cord from the outlet to stop the STANDBY/TIMER lamp from flashing.

4. SELF-DIAGNOSTIC SCREEN DISPLAY

For errors with symptoms such as "power sometimes shuts off" or "screen sometimes goes out" that cannot be confirmed, it is possible to bring up past occurances of failure for confirmation on the screen:

[To Bring Up Screen Test]
In standby mode, press buttons on the remote commander sequentially in rapid succession as shown below:

[Screen display] ➡ channel [5] ➡ Sound volume [-] ➡ Power ON

⇧ Note that this differs from entering the service mode (mode volume [+]).

Self-Diagnosis screen display

SELF DIAGNOSTIC

002 : 000 ← Numeral "0" means that no fault has been detected.
003 : 000
004 : 000
005 : 001 ← Numeral "1" means a fault has been detected.

101 : 000

5. HANDLING OF SELF-DIAGNOSTIC SCREEN DISPLAY

Since the diagnostic results displayed on the screen are not automatically cleared, always check the self-diagnostic screen during repairs. When you have completed the repairs, clear the result display to “0”.

Unless the result display is cleared to “0”, the self-diagnostic function will not be able to detect subsequent faults after completion of the repairs.

[Clearing the result display]
To clear the result display to “0”, press buttons on the remote commander sequentially as shown below when the diagnostic screen is being displayed.

Channel [8] ➡ 0

[Quitting Self-diagnostic screen]
To quit the entire self-diagnostic screen, turn off the power switch on the remote commander or the main unit.

6. SELF-DIAGNOSTIC CIRCUIT

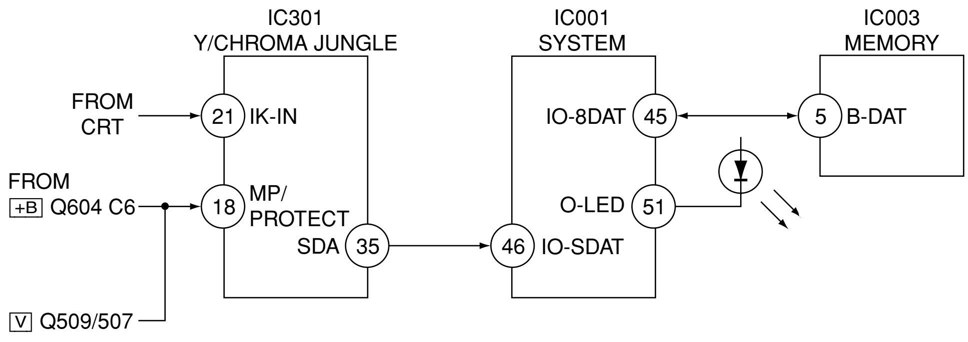

+B overcurrent (OCP)	Occurs when an overcurrent on the +B(135) line is detected by Q604. If Q604 go to ON and the voltage to pin 18 of IC301 should go down when V.SYNC is more than seven verticals in a period, the unit will automatically turn off.
Vertical deflection stopped	Occurs when an absence of the vertical deflection pulse is detected by Q509 and IC001 shut down the power supply.
Vertical deflection overcurrent	Occurs when an overcurrent on V drive line is detected by Q507. Power supply will be shut down when detect this by IC001.
White balance failure	If the RGB levels* do not balance or become low level within 5 seconds, this error will be detected by IC301. TV will stay on, but there will be no picture.

* (Refers to the RGB levels of the AKB detection Ref pulse that detects IK.)

The operating instruction mentioned here are partial abstracts from the Operating Instruction Manual. The page numbers of the Operating Instruction Manual remain as in the manual.

SECTION 1
GENERAL

WARNING

- Dangerously high voltages are present inside the TV.
- Operate the TV only between 110 - 240 V AC.

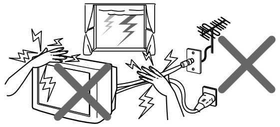

For your own safety, do not touch any part of the TV, the power cord and the antenna cable during lightning storms.

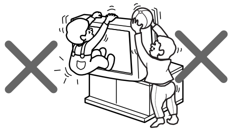

For children's safety, do not leave children alone with the TV. Do not allow children to climb onto it.

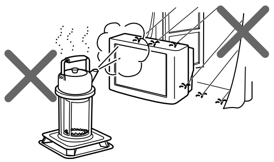

To prevent fire or shock hazard, do not expose the TV to rain or moisture.

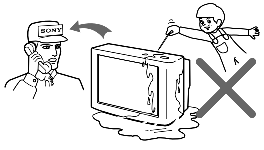

Do not operate the TV if any liquid or solid object falls into it. Have it checked immediately by qualified personnel only.

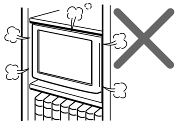

Do not block the ventilation openings of the TV. Do not install the TV in a confined space, such as a bookcase or built-in cabinet.

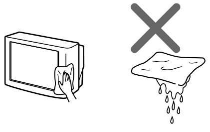

Clean the TV with a dry and soft cloth.
Do not use benzine, thinner, or any other chemicals to clean the TV. Do not scratch the picture tube.

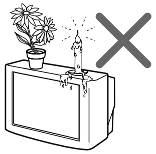

Do not place any objects on the TV.

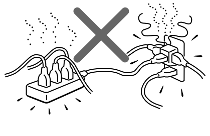

Do not plug in too many appliances to the same power socket. Do not damage the power cord.

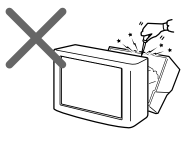

Do not open the cabinet and the rear cover of the TV as high voltages and other hazards are present inside the TV. Refer servicing and disposal of the TV to qualified personnel.

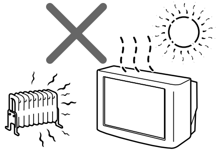

Your TV is recommended for home use only.
Do not use the TV in any vehicle or where it may be subject to excessive dust, heat, moisture or vibrations.

WARNING (continued)

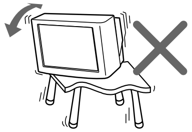

Install the TV on a stable TV stand and floor which can support the TV set weight. Ensure that the TV stand surface is flat and its area is larger than the bottom area of the TV.

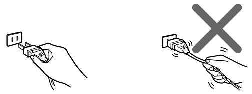

Pull the power cord out by the plug. Do not pull the power cord itself. Even if your TV is turned off, it is still connected to the AC power source (mains) as long as the power cord is plugged in. Unplug the TV before moving it or if you are not going to use it for several days.

Getting Started

Step 1

Connect the antenna

If you wish to connect a VCR, see the **Connecting a VCR** diagram below.

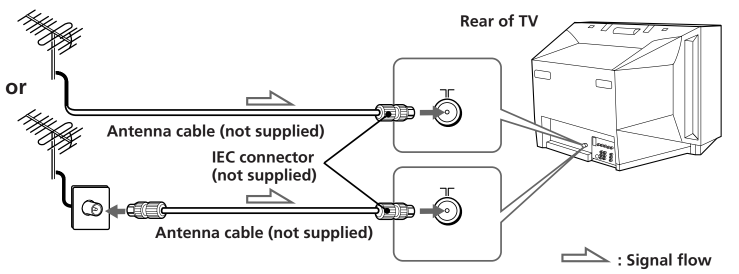

Connecting a VCR

To watch the video input, press ⊕ (see page 13).

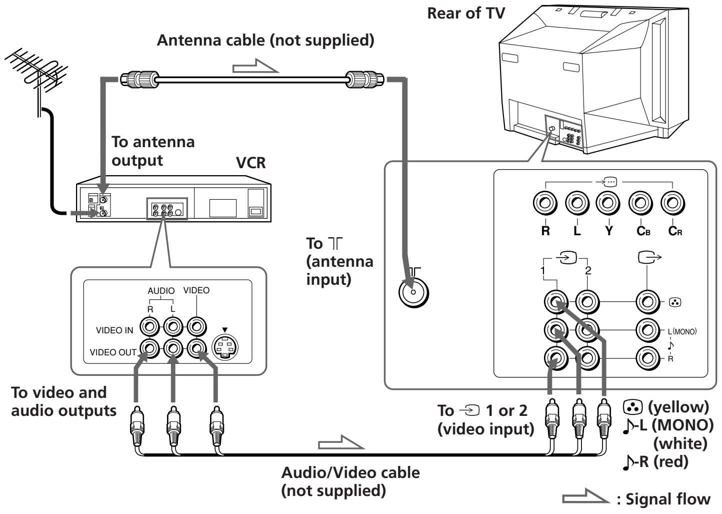

Notes

- If you connect a monaural VCR, connect the yellow plug to ⊙ (the yellow jack) and the black plug to ♪-L (MONO) (the white jack).
- If you connect a VCR to the ╥ (antenna input) terminal, preset the signal output from the VCR to the program number 0 on the TV.
- When no signal is input from the connected video equipment, the TV screen becomes blue.

CAUTION

- Do not connect the power cord until you have completed making all other connections; otherwise a minimum leakage current might flow through the antenna and other terminals to ground.
- To avoid battery leakage and damage to the remote, remove the batteries from the remote if you are not going to use it for several days. If any liquid that leaks from the batteries touches you, immediately wash it away with water.

Step 2

Insert the batteries into the remote

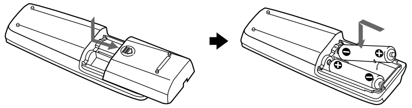

Note

- Do not use old batteries nor use different types of batteries together.

Step 3

Preset the channels automatically

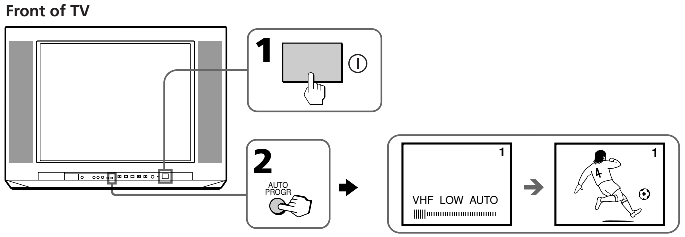

Tips

- If you want to stop automatic channel presetting, press SELECT twice.
- If your TV has preset an unwanted channel or cannot preset a particular channel, then preset your TV manually (see page 10).

Note (KV-XJ29M50 only)

- During automatic channel presetting, your TV screen will indicate “B/G” , “I”, “D/K” or “M” for the TV system.

Connecting optional components

You can connect optional audio/video components, such as a VCR, multi disc player, camcorder, video game or stereo system.

To watch the video input of the connected equipment, press (see page 13).

Connecting a camcorder/video game equipment using the (video input) jacks

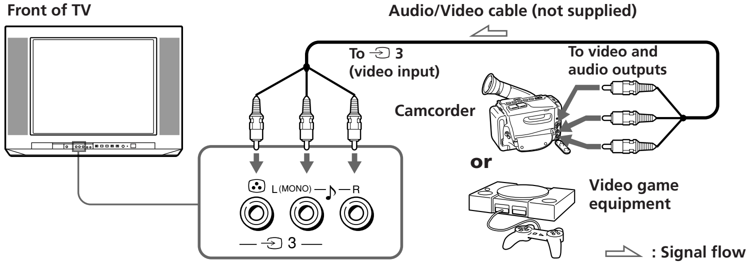

Note

- You can also connect video equipment to the 1 or 2 (video input) jacks at the rear of your TV.

Connecting audio/video equipment using the (monitor output) jacks

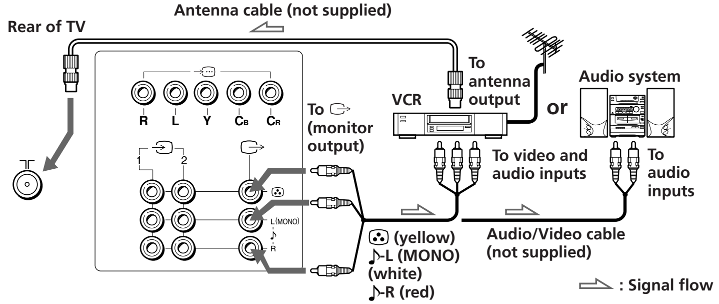

Note

- If you select "DVD" on your TV screen, the signal from the (monitor out) jacks will not be output properly. This does not indicate a malfunction.

Connecting a DVD player using the (component video input) jacks

1 Connect R and L under (component video input) on your TV to the LINE OUT, AUDIO R and L output connectors on your DVD player.
2 Using a component video cable, connect Y, C_B, and C_R under (component video input) on your TV to the COMPONENT VIDEO OUT Y, C_B, and C_R output connectors on your DVD player.

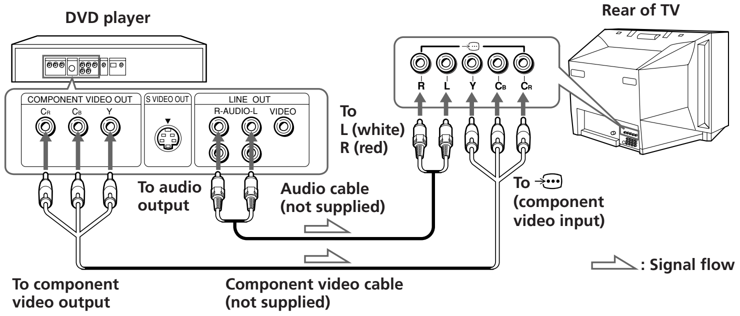

Notes

- If your DVD player can output interlace and progressive mode signals, select the interlace output when connecting to (component video input) on your TV. Your TV can receive either 525i/60Hz or 625i/50Hz interlace signals.
- Some DVD player terminals may be labeled differently:

Connect	To (on the DVD player)
Y (green)	Y
C_B (blue)	C_b, B-Y or P_B
C_R (red)	C_r, R-Y or P_R

- Since the high quality pictures on a DVD disc contain a lot of information, picture noise may appear. In this case, adjust the sharpness ("SHARP") (see page 16).

Securing the TV

To prevent the TV from falling, secure the TV using one of the following methods:

A With the supplied screws, attach the band to the TV stand and to the rear of the TV using the provided hole.

or

B Put the cord or chain through the clamps to secure the TV against a wall or pillar.

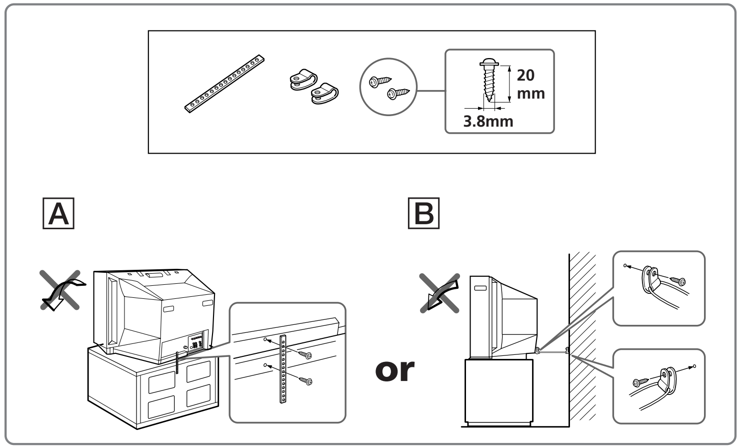

Note
- Use only the supplied screws. Use of other screws may damage the TV.

Presetting channels

You can preset up to 100 TV channels in numerical sequence from program number 1 using the remote and the buttons on your TV as well.

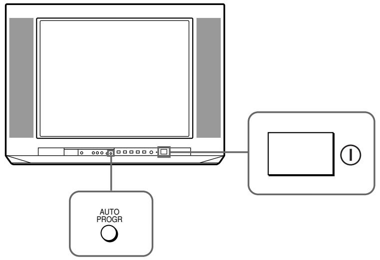

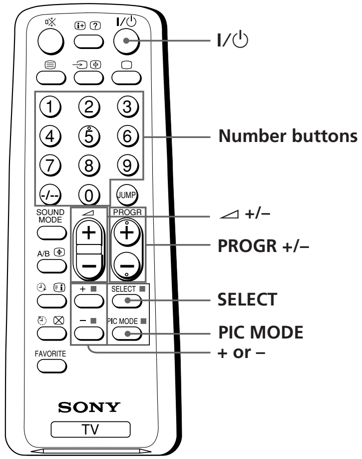

Presetting channels automatically

1 Press ⓘ to turn on the TV.

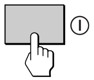

2 Press AUTO PROGR.

Note (KV-XJ29M50 only)
- During automatic channel presetting, your TV screen will indicate "B/G" , "I", "D/K" or "M" for the TV system.

To preset channels automatically from a specified program number

(1) Press SELECT until "AUTO PROGRAM" appears.

(2) Press + or –.
The on-screen display will start flashing.

(3) Press PROGR +/– or the number buttons until the desired program number appears.

(4) Press + or –.

continued

Presetting channels manually

1 Press SELECT until "MANUAL PROGRAM" appears.

2 Press + or –.

3 Press PROGR +/– or the number buttons until the desired program number appears.

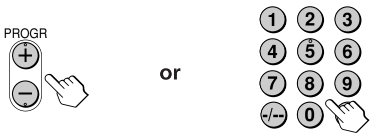

4 Press + or – until the desired channel picture appears.

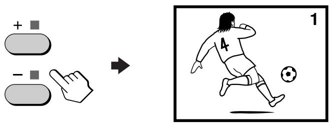

5 Press SELECT.

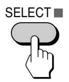

Note
- If you preset a locked program number, that particular program number will be unlocked automatically (see page 18).

To change the TV system setting

If the picture or sound is abnormal when receiving programs through the ╥ (antenna input) terminal

(1) Press SELECT until "TV SYS" appears.

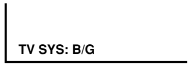

(2) Press + or – to select the appropriate TV system until the picture or sound quality is optimal.

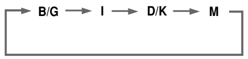

To change the color system setting

If the color is abnormal when receiving programs through the ╥ (antenna input) terminal or the ⊖ (video input) jack.

(1) Press SELECT until "COLOR SYS" appears.

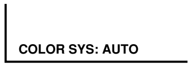

(2) Press + or – to select the appropriate color system until the color is optimal.

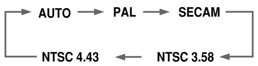

Tip
- Normally set "COLOR SYS" to "AUTO".

Skipping program numbers

1 Press PROGR +/– or the number buttons until the unused or unwanted program number appears.

2 Press SELECT until "MANUAL PROGRAM" appears.

3 Press + or –.

4 Press PIC MODE.

5 Press SELECT.

To restore the skipped program number again

Preset the channel automatically or manually.

Tip
- You can also use SELECT and ⊿ +/– on the TV to preset channels and skip program numbers.

To use the fine tuning (FINE) function

The fine tuning (FINE) function may help to reduce the following problems: incomplete teletext display (KV-XJ29M61 only), double images and lines moving across the TV screen.

You can use the fine tuning function as below:

(1) Select the program number you want to adjust.
(2) Press SELECT until "MANUAL PROGRAM" appears on the screen.
(3) Press + or – on the remote control once.
(4) Press ⊞ to display "FINE" on the screen.
(5) Press + or – continuously until the above problems are minimized.
The + or – icon on the screen flashes while tuning.
(6) Press SELECT to return to normal screen.

Watching the TV

This section explains functions used while watching the TV. Most operations can be done using the remote.

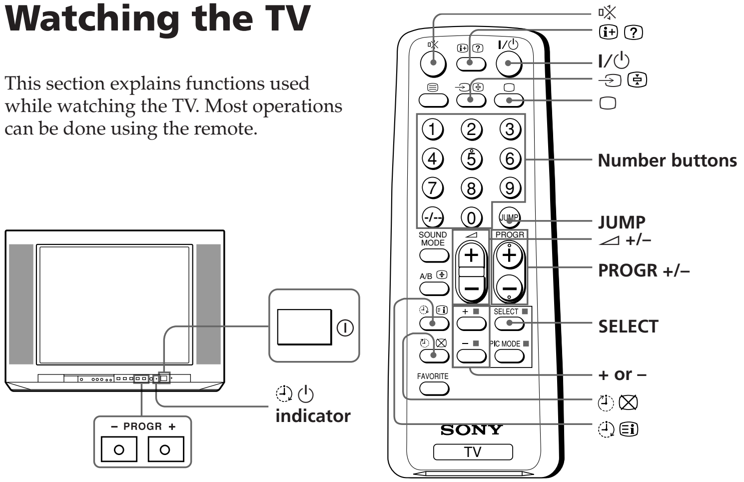

1 Press ⏽ to turn on the TV.

When the TV is in the standby mode (the ⏻ indicator on the TV is lit red), press I/⏻ on the remote or PROGR +/– on the TV.

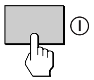

2 Press PROGR +/– or the number buttons to select the program number.

For double digit numbers, press -/--, then the number (e.g., for 25, press -/--, then 2 and 5).

3 Press ◿ +/– to adjust the volume.

Additional tasks

To	Press
Turn off temporarily	I/⏻. The ⏻ indicator on the TV lights up red.
Turn off completely	⏽ on the TV.
Mute the sound	🔇.
Watch the video input (VCR, camcorder, etc.)	⇥ to select “VIDEO 1”, “VIDEO 2” or “DVD”. To return to the TV program, press ▢.
Jump back to the previous program number	JUMP.
Display the on-screen information*	ⓘ.
Adjust the volume of all program numbers automatically	SELECT repeatedly until “INTELLIGENT VOL” appears, then press + or – to select “ON”. To cancel, select “OFF”.
Change the picture size when receiving wide mode (16:9) picture signal.	SELECT repeatedly until “WIDE MODE” appears, then press + or – to select “ON”. To cancel, select “OFF”.
Adjust the picture position when it is not aligned to the TV screen	SELECT repeatedly until “PIC ROTATION” appears, then press + or – to adjust the alignment of the picture position. PIC ROTATION ⊟↲▭↳⊞ The ↳⊞ or ⊟↲ icon on the screen flashes while adjusting.

* The picture, sound, and either the program number or video input are displayed. The on-screen display for the picture and sound information disappears after about three seconds.

Changing the on-screen display language

1 Press SELECT until “语言/ LANGUAGE : ENGLISH” appears on the screen.

2 Press + or – to select “中文”.

Tip
- You can also use SELECT and ◿ +/– on the TV to select the on-screen display language.

continued

Watching the TV (continued)

Setting the Wake Up timer

1 Press ⏲ until the desired period of time appears.

The Wake Up timer starts immediately after you have set it.

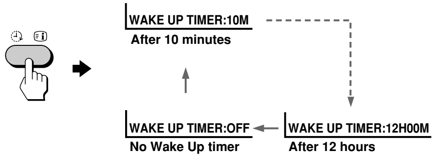

2 Select the program number or video input you want to display when you wake up.

3 Press I/⏻ or set the Sleep timer if you want the TV to turn off automatically.

The ⏲ indicator on the TV lights up orange when the TV goes into standby mode.

To cancel the Wake Up timer

Press ⏲ until "WAKE UP TIMER: OFF" appears or turn off the TV's main power.

Note

- If no buttons or controls are pressed for more than two hours after the TV is turned on using the Wake Up timer, the TV automatically goes into the standby mode. To continue watching the TV, press any button or control on the TV or the remote.

Setting the Sleep timer

Press ⏲ until the desired period of time appears.

The Sleep timer starts immediately after you have set it.

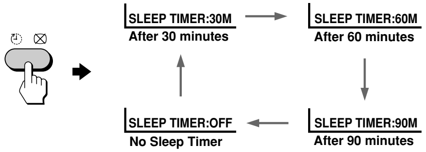

To cancel the Sleep timer

Press ⏲ until "SLEEP TIMER: OFF" appears or turn the TV off.

– 13 –

Customizing the picture and sound

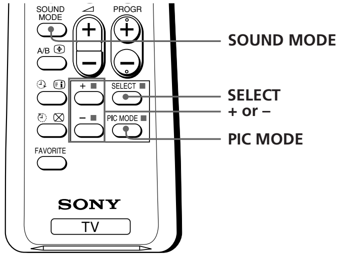

You can customize the picture and sound by selecting the picture and sound modes or by adjusting its settings.

You can change the sound effect by selecting the surround mode.

Selecting the picture and sound modes

To select the picture mode

Press PIC MODE repeatedly until you get the desired picture mode.

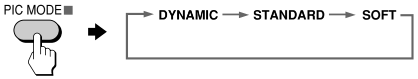

Select	To
"DYNAMIC"	view high contrast pictures.
"STANDARD"	view normal contrast pictures.
"SOFT"	view mild pictures.

To select the sound mode

Press SOUND MODE repeatedly until you get the desired sound mode.

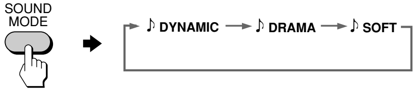

Select	To
"DYNAMIC"	listen to dynamic and clear sound that emphasizes the low and high sound.
"DRAMA"	listen to sound that emphasizes vocals and background music.
"SOFT"	listen to soft sound.

Advanced Operations

continued

KV-XJ29M50/XJ29M61
RM-952

Adjusting the picture and sound settings

1 Press SELECT until the desired setting appears.

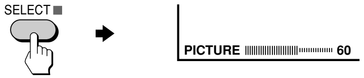

Each time you press SELECT, the setting item will change as follows:

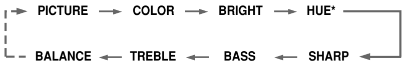

2 Press + or – to adjust the item.

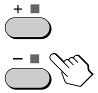

3 To adjust other items, repeat steps 1 to 2.

* "HUE" can be adjusted for the NTSC system only.

Notes
- When you select a picture or sound mode, the adjusted settings will be reset according to the selected mode.
- You can also use SELECT and ◿ +/– on the TV to adjust the picture and sound settings.

Selecting the surround mode

1 Press SELECT repeatedly until "SURROUND" appears.

2 Press + or – to select the desired surround sound.

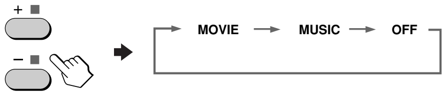

Select	To
"MOVIE"	listen to sound that spreads out over a large area, giving the feeling of being at a movie theatre.
"MUSIC"	listen to the sound that gives the feeling of being at a live concert.
"OFF"	turn off the surround sound.

Viewing your favorite channels

You can display six of your favorite channels for quick and easy selection. You can program the favorite channel as well.

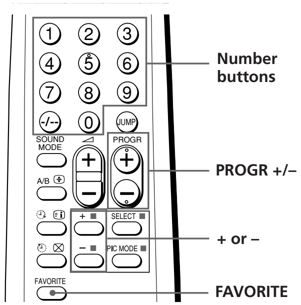

Selecting a favorite channel

1 Press FAVORITE.

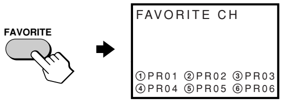

2 Press the number button from 1 to 6 to select the desired favorite channel.

When you use the "FAVORITE CH" feature for the first time, six preset channels will appear.

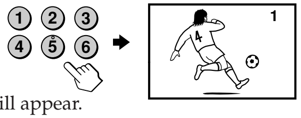

Programming the favorite channel

1 Press PROGR +/– or number buttons to select the program number you want to program (e.g. program number 8).

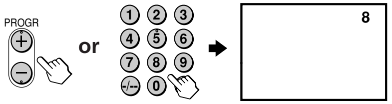

2 Press SELECT until "FAVORITE CH SETUP" appears.

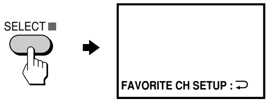

3 Press + or – to select the favorite channel you want to program (e.g. ③).

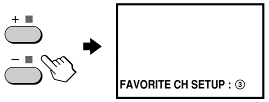

4 Press SELECT.

The selected favorite channel (e.g.,③) turns red for about one second.

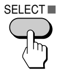

5 To program other favorite channels, repeat steps 1 to 4.

– 15 –

Blocking the channels (CHILD LOCK)

You can lock some program numbers to prevent children from watching certain channels, by using the buttons on the remote control.

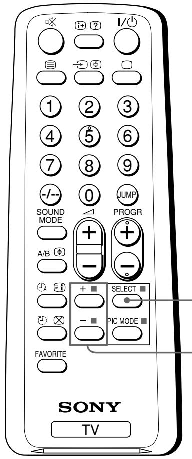

1 Select the program number you want to lock.

2 Press SELECT until "CHILD LOCK" appears on the screen.

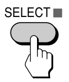

3 Press + or – to select "ON".

The 🔒 symbol appears on the screen.

To cancel, press + or – to select "OFF". The 🔒 symbol disappears from the screen.

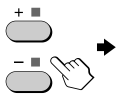

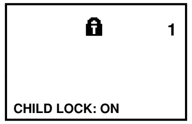

Note
- If you preset a locked program number, that particular program number will be unlocked automatically (see page 9).

Enjoying stereo or bilingual programs

(KV-XJ29M61 only)

You can enjoy stereo sound or bilingual programs of NICAM and A2 stereo systems.

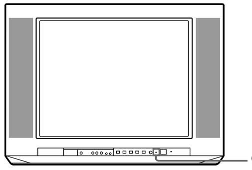

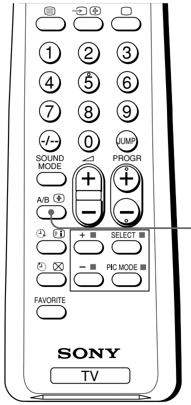

Press A/B repeatedly until you receive the sound you want.

The on-screen display changes to show the selected sound.

The indicator on the TV lights up red when receiving any stereo or bilingual program.

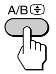

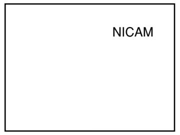

When receiving a NICAM program

Broadcasting	On-screen display (Selected sound)
NICAM stereo	NICAM (Stereo sound) → MONO (Regular sound)
NICAM bilingual	NICAM MAIN (Main sound) → NICAM SUB (Sub sound) → MONO (Regular sound)
NICAM monaural	NICAM MAIN (Main sound) → MONO (Regular sound)

continued

KV-XJ29M50/XJ29M61
RM-952

Enjoying stereo or bilingual programs (continued)

When receiving an A2 program

Broadcasting	On-screen display (Selected sound)
A2 stereo	
A2 bilingual	

Receiving area for NICAM and A2 programs

System	Receiving area
NICAM	Hong Kong, Singapore, New Zealand, Malaysia, Thailand, etc.
A2	Australia, Malaysia, Thailand, etc.

Notes
- If the signal is very weak, the sound becomes monaural automatically.
- If the stereo sound is noisy when receiving a NICAM program, select "MONO". The sound becomes monaural, but the noise is reduced.

If the sound is distorted when receiving a monaural program through the ╥ (antenna input) terminal

Press A/B repeatedly until "MONO" appears on the screen.

To cancel the monaural sound setting, press A/B again until "AUTO" appears on the screen.

Notes
- The "MONO" or "AUTO" setting is memorized for each program number.
- You cannot receive stereo broadcast signal when the TV is in the "MONO" setting. Normally set the TV to "AUTO".

Viewing Teletext

(KV-XJ29M61 only)

TV stations broadcast an information service called Teletext via some TV channels. Teletext allows you to receive various information, such as shares market or news.

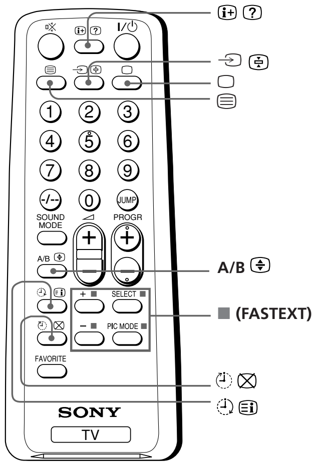

Displaying Teletext

1 Select a TV channel that carries the Teletext broadcast you want to watch.

2 Press ▤ to display the text.

A Teletext page (normally the index page) is displayed. If there is no Teletext broadcast, "100" is displayed at the top left corner of the screen.

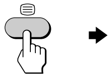

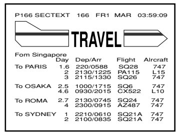

To turn off Teletext

Press ▢.

continued

Viewing Teletext (continued)

Additional Teletext tasks

To	Do this
display a Teletext page on the TV picture	Press ⊜. Each time you press ⊜, the screen changes as follows: Teletext → Teletext and TV → TV.
check the contents of a Teletext service	Press ⓘ. An overview of the Teletext contents and page numbers appear on the screen.
select a Teletext page	Press the number buttons to enter the three-digit page number of the desired Teletext page. * If you make a mistake, reenter the correct page number. To access the next or previous page, press PROGR +/–.
Hold (pause) a Teletext display	Press ⓗ to display the symbol " ⓗ " at the top left corner of the screen. To resume normal Teletext operation, press ⓗ or ⊜.
reveal concealed information (e.g., an answer to a quiz)	Press ⓘ?. To conceal the information, press the button again.
enlarge the Teletext display	Press ⓔ. Each time you press ⓔ, the Teletext display changes as follows: Enlarge upper half → Enlarge lower half → Normal size.
wait for a Teletext page while watching a TV program	1 Enter the Teletext page number that you want to refer to, then press ⊠. 2 When the page number is displayed, press ⊜ to show the text.

* You can also select a Teletext page that appears in the colored column at the bottom of the screen using the corresponding color-coded button on the remote.

Using FASTEXT

This feature allows you to quickly access a Teletext page that uses FASTEXT. When a FASTEXT program is broadcasted, the colored menus appear at the bottom of the screen. The colors of the menus correspond to the red■, green■, yellow■, and blue■ color-coded buttons on the remote.

To access a FASTEXT menu

Press the color-coded button on the remote corresponding to the menu you want. The menu page appears on the screen after several seconds.

– 17 –

Self-diagnosis function

Your TV is equipped with a self-diagnosis function. If there is a problem with your TV, the ⏻ indicator flashes red. The number of times the ⏻ indicator flashes indicates the possible causes.

Front of TV

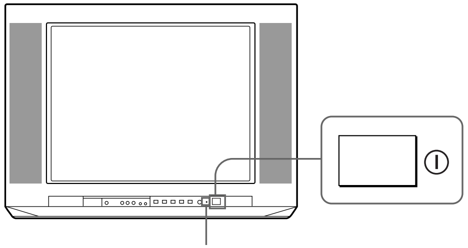

⏻ indicator

1 Check that the ⏻ indicator flashes red a number of times between 3-second intervals.

2 Count the number of times the ⏻ indicator flashes.

3 Press Ⓘ (main power) to turn off your TV.

4 Inform your nearest Sony service center about the number of times the ⏻ indicator flashes.
Be sure to note the model name and serial number located on the rear of your TV.

Troubleshooting

If you find any problem while viewing your TV, please check the following guide. If any problem persists, contact your Sony dealer .

Symptom	Possible cause	Solutions	Page
Snowy picture 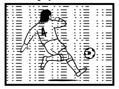 **Noisy sound** 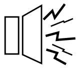	• Connection is loose or the cable is damaged.	• Check the antenna cable and connection on the TV, VCR and on the wall.	4
	• Channel presetting is inappropriate or incomplete.	• Press SELECT until “MANUAL PROGRAM” appears on the screen, then preset the channel again.	10
	• The antenna type is inappropriate.	• Check the antenna type (VHF/UHF). Contact a Sony dealer for advice.	–
	• The antenna direction is inappropriate.	• Adjust the antenna direction. Contact a Sony dealer for advice.	–
	• Signal transmission is low.	• Try using a booster.	–
Distorted picture **Noisy sound** 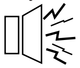	• Broadcast signals are too strong.	• Turn off or disconnect the booster if it is in use.	–
Good picture **Noisy sound** 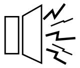	• The TV system setting or channel presetting is inappropriate or incomplete.	• If the sound of all the channels are noisy, check the TV system (TV SYS) setting, then press AUTO PROGR to preset the channels again. • If the sound of some channels are noisy, select the channel, then select the appropriate TV system (TV SYS).	9 10
	• The selected sound is inappropriate.	• If the sound of some channels are noisy, select the channel, then press A/B to select the main sound (KV-XJ29M61 only).	19
No picture **No sound** 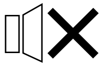	• The power cord, antenna or VCR is not connected.	• Check the power cord, antenna and the VCR connections.	4
	• The TV is not turned on.	• Press I/⏻ (power). • Press ⏻ (main power) on the TV to turn off the TV for about five seconds, then turn it on again.	13 12

Symptom	Possible cause	Solutions	Page
Good picture **No sound** 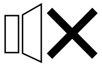	• The volume level is too low.	• Press ◿ + to increase the volume level.	12
	• The sound is muted.	• Press 🔇 to cancel the muting.	13
	• Broadcast signal has a transmission problem.	• Press A/B until the sound is optimal (KV-XJ29M61 only).	19
Dotted lines or stripes	• There is local interference from cars, neon signs, hair dryers, power generators, etc.	• Do not use a hair dryer or other equipment near the TV. • Adjust the antenna direction for minimum interference. Contact a Sony dealer for advice.	– –
Double images or “ghosts”	• Broadcast signals are reflected by nearby mountains or buildings.	• Use a highly directional antenna. • Use the fine tuning (FINE) function.	– 11
	• The antenna direction is inappropriate.	• Adjust the antenna direction. Contact a Sony dealer for advice.	–
	• Use of a booster is inappropriate.	• Turn off or disconnect the booster if it is in use.	–
No color	• The color level setting is too low.	• Press SELECT until “COLOR” appears on the screen, then press + or – to adjust the color level.	16
	• The color system setting is inappropriate.	• Press SELECT until “COLOR SYS ” appears on the screen, then check the color system setting (usually set this to “AUTO”).	11
	• The antenna direction is inappropriate.	• Adjust the antenna direction. Contact a Sony dealer for advice.	–
Abnormal color patches	• The magnetic disturbance from external speakers or other equipment, or the direction of the earth’s magnetic field may affect the TV.	• Keep external speakers or other electrical equipment away from the TV. Do not move the TV while the TV is turned on. Press ⏻ (main power) on the TV to turn off the TV for about 15 minutes, then turn it on again.	–
TV cannot receive stereo broadcast signal (KV-XJ29M61 only)	• The stereo reception setting is inappropriate.	• Press A/B until “AUTO” appears on the screen.	19

continued

Troubleshooting (continued)

Symptom	Possible cause	Solutions	Page
Stereo broadcast sound switches on and off or is distorted. or The sound switches between monaural and stereo, frequently. (KV-XJ29M61 only)	• Connection is loose or the cable is damaged.	• Check the antenna cable and connection on the TV, VCR and on the wall.	4
	• The antenna direction is inappropriate.	• Adjust the antenna direction. Contact a Sony dealer for advice.	–
	• Broadcast signal has a transmission problem.	• Press A/B until a better sound is heard.	19
"100" appears on the top of the screen and there is no Teletext display. (KV-XJ29M61 only)	• The channel carries no Teletext broadcast.	—	21
Teletext display is incomplete (snowy picture or double images). (KV-XJ29M61 only)	• Connection is loose or the cable is damaged.	• Check the antenna cable and connection on the TV, VCR, and at the wall.	4
	• The antenna direction is inappropriate.	• Adjust the antenna direction. Contact a Sony dealer for advice.	–
	• Signal transmission is too low.	• Try using a booster. • Use the fine tuning (FINE) function.	– 11
Picture slant 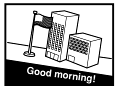	• The magnetic disturbance from external speakers or other equipment, or the direction of the earth's magnetic field may affect the TV.	• Keep external speakers or other electrical equipment away from the TV. • Press SELECT until "PIC ROTATION" appears on the screen, then press + or – to adjust the picture until it is optimal.	– 13
Lines moving across the TV screen.	• There is interference from external sources, e.g., heavy machineries, nearby broadcast station.	• Use the fine tuning (FINE) function.	11
The ⏻ indicator on your TV flashes red a number of times between 3-second intervals.	• Your TV may need service.	• Contact your nearest Sony service center.	23
TV cabinet creaks.	• Changes in room temperature sometimes make the TV cabinet expand or contract, making a noise. This does not indicate a malfunction.	—	–
A "boom" sound is heard when the TV is turned on.	• The TV's demagnetizing function is working. This does not indicate a malfunction.	—	–

Overview of controls

TV front panel

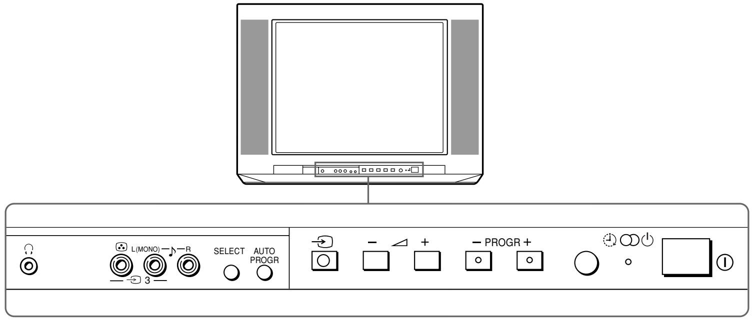

Button	Function	Page
AUTO PROGR	Preset channels automatically.	5
SELECT	Select the desired item.	11
PROGR +/–	Select program number.	12
⏼	Turn off or turn on the TV.	12
◿ +/–	Adjust volume.	12
⏻	Standby indicator.	12
→⊐	Select TV or video input.	13
◷	Wake Up indicator.	14
(KV-XJ29M61 only)	Stereo/bilingual indicator.	19
🎧	Headphone jack.	–

continued

Overview of controls (continued)

Remote Control

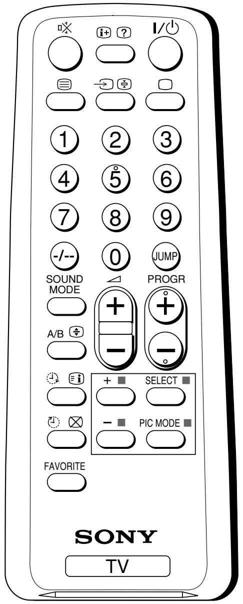

Button	Function	Page
SELECT	Select the desired item.	10
+/–	Adjust value.	10
PROGR +/–	Select program number.	12
0 – 9, -/--	Input numbers.	12
⊿ +/–	Adjust volume.	12
I/⏻	Turn off temporarily or turn on the TV.	12
⇥	Select TV or video input.	13
▢	Display the TV program.	13
🔇	Mute the sound.	13
ⓘ+	Display on-screen information.	13
JUMP	Jump to previous program number.	13
Timer operations		
◷ (on)	Set TV to turn on automatically.	14
◷ (off)	Set TV to turn off automatically.	14
PIC MODE	Select picture mode.	15
SOUND MODE	Select sound mode.	15
FAVORITE	Display favorite channels.	17
Stereo/bilingual operations (KV-XJ29M61 only)		
A/B	Select stereo/bilingual mode.	19
Teletext operations (KV-XJ29M61 only)		
▤	Display Teletext broadcast.	21
▤i	Display Teletext service contents.	22
⊜	Stop teletext page from scrolling.	22
?	Reveal concealed information.	22
⊕	Enlarge the Teletext display.	22
⊠	Show TV screen while waiting for Teletext page.	22
■ (red, green, yellow, blue)	Access a FASTEXT menu	22

The names/symbols of buttons on the remote are indicated in different colors to represent the available functions.

Label color	Button function
White	For general TV operations
Green	For Teletext operations

SECTION 2
DISASSEMBLY

2-1. REAR COVER REMOVAL

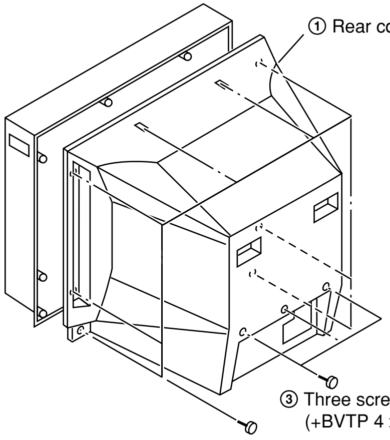

2-2. SPEAKER REMOVAL

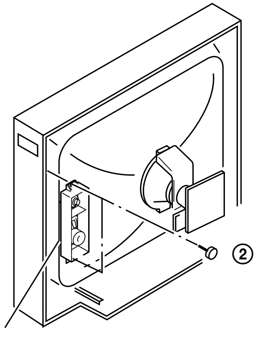

2-3. CHASSIS ASSY REMOVAL

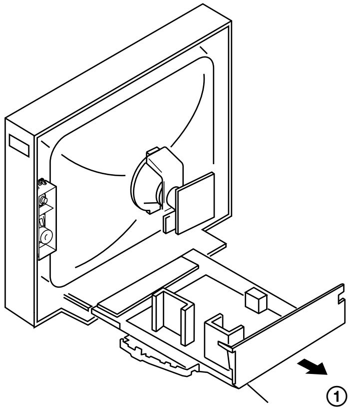

2-4. SERVICE POSITION

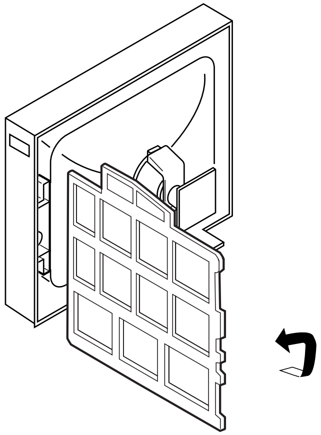

2-5. REPLACEMENT OF PARTS

For replacement of the Multi Button and Light Guide, unscrew them, exchange with the new parts, and fix them with screws (+BVTP) respectively.

2-5-1. REPLACEMENT OF MULTI BUTTON

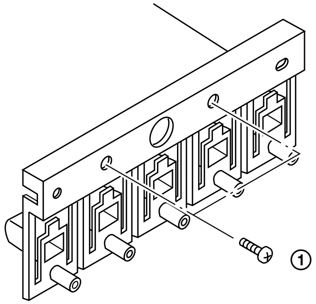

2-5-2. REPLACEMENT OF LIGHT GUIDE

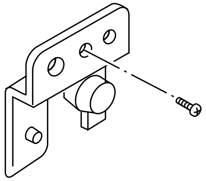

2-6. J4 BOARD AND TERMINAL BRACKET REMOVAL

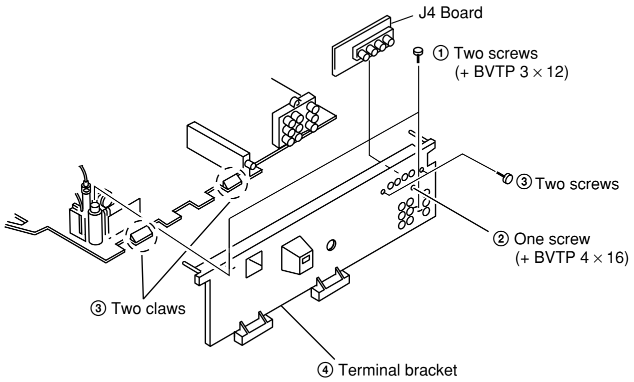

2-7. D3 BOARD REMOVAL

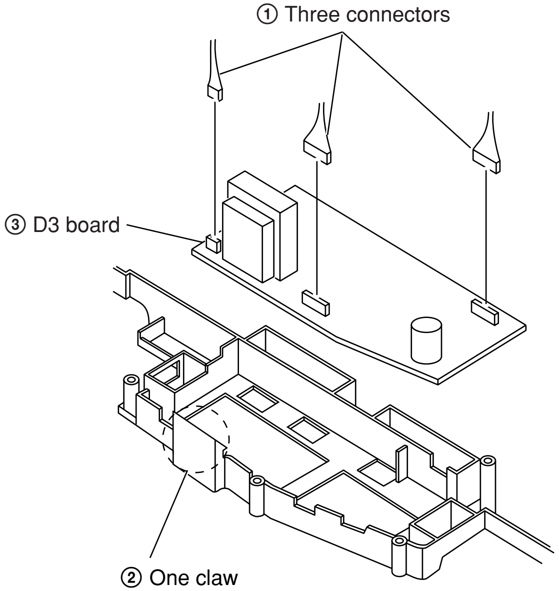

2-8. V1 BOARD REMOVAL

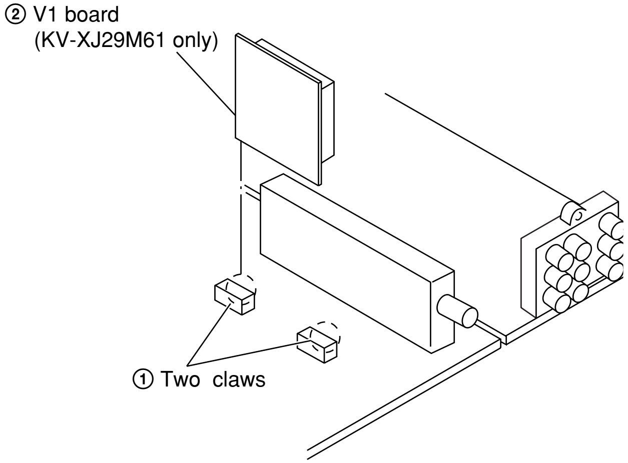

2-9. H5 BOARD REMOVAL

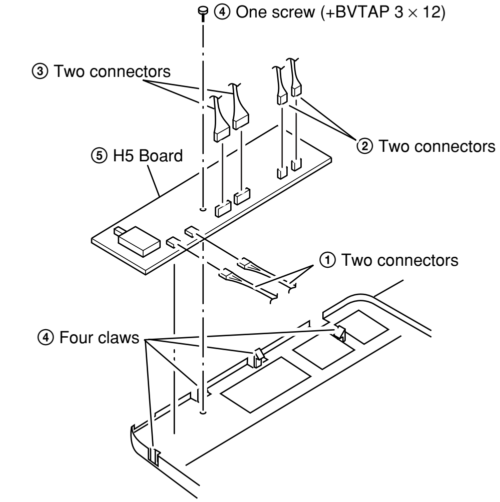

2-10. A AND B9 BOARDS REMOVAL

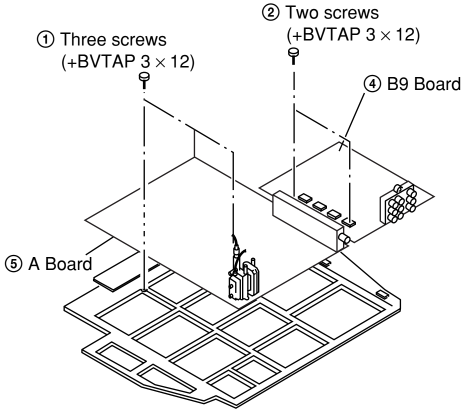

2-11. PICTURE TUBE REMOVAL

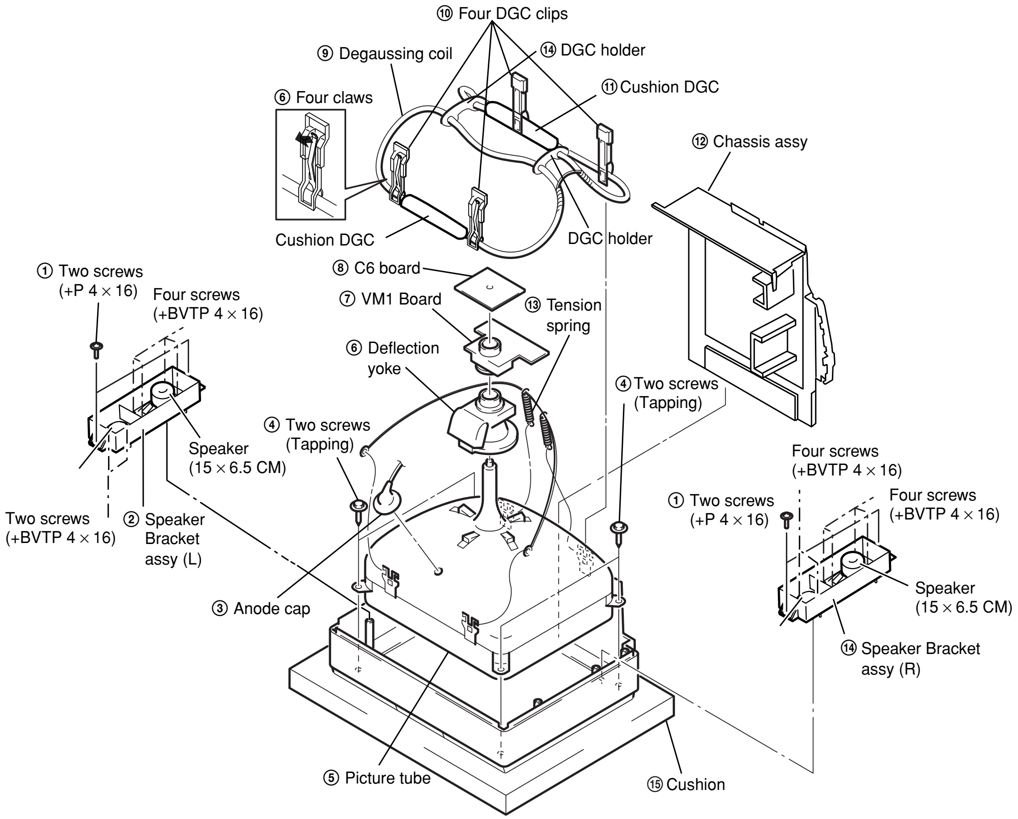

• REMOVAL OF ANODE-CAP

NOTE : After removing the anode, short circuit the anode of the picture tube and the anode cap to the metal chassis, CRT shield or carbon paint on the CRT.

• REMOVING PROCEDURES

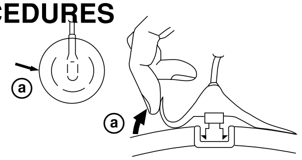

① Turn up one side of the rubber cap in the direction indicated by the arrow ⓐ.

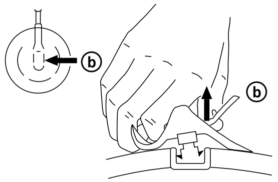

② Using a thumb pull up the rubber cap firmly in the direction indicated by the arrow ⓑ.

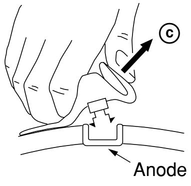

③ When one side of the rubber cap is separated from the anode button, the anode-cap can be removed by turning up the rubber cap and pulling it up in the direction of the arrow ⓒ.

• HOW TO HANDLE AN ANODE-CAP

① Do not damage the surface of anode-caps with sharp shaped objects.
② Do not press the rubber too hard so as not to damage the inside of anode-cap.
A metal fitting called the shatter-hook terminal is built into the rubber.
③ Do not turn the foot of rubber over too hard.
The shatter-hook terminal will stick out or damage the rubber.

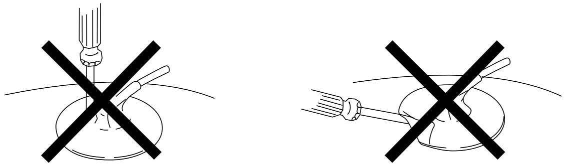

SECTION 3
SET-UP ADJUSTMENTS

- The following adjustments should be made when a complete realignment is required or a new picture tube is installed.
- These adjustments should be performed with rated power supply voltage unless otherwise noted.

Controls and switches should be set as follows unless otherwise noted:

PICTURE control .... normal
BRIGHTNESS control .... normal

Perform the adjustments in the following order :

1. Beam Landing
2. Convergence
3. Focus
4. White Balance

Note : Test Equipment Required.

1. Color-bar/Pattern Generator
2. Degausser
3. Oscilloscope

Preparation :

- In order to reduce the influence of geomagnetism on the set's picture tube, face it east or west.
- Switch on the set's power and degauss with the degausser.

3-1. BEAM LANDING

1. Input a white signal with the pattern generator.
   Contrast } normal
   Brightness }
2. Position neck assy as shown in Fig3-2.
3. Set the pattern generator raster signal to a green raster.
4. Move the deflection yoke to the rear and adjust with the purity control so that the green is at the center and the blue and the red take up equally sized areas on each side.
   (See Figures 3-1 through 3-4.)
5. Move the deflection yoke forward and adjust so that the entire screen is green. (See Figure 3-2.)
6. Switch the raster signal to blue, then to red and verify the condition.
7. When the position of the deflection yoke has been decided, fasten the deflection yoke with the screws and DY spacers.
8. If the beam does not land correctly in all the corners, use a magnet to adjust it.
   (See Figure 3-5.)

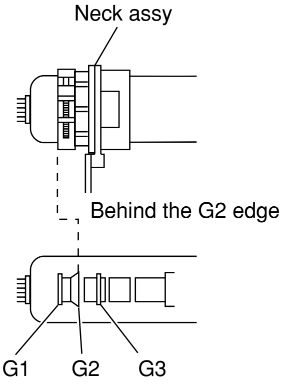

Fig. 3-1

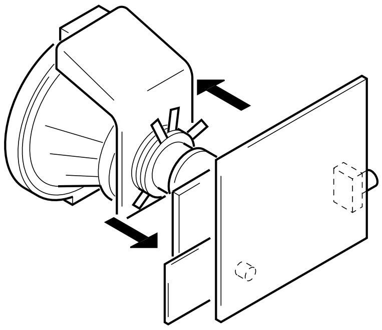

Fig. 3-2

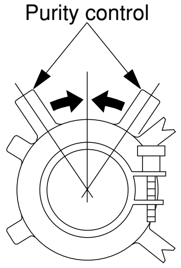

Fig. 3-3

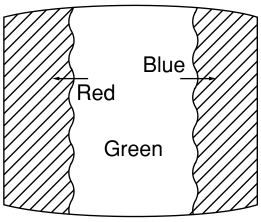

Fig. 3-4

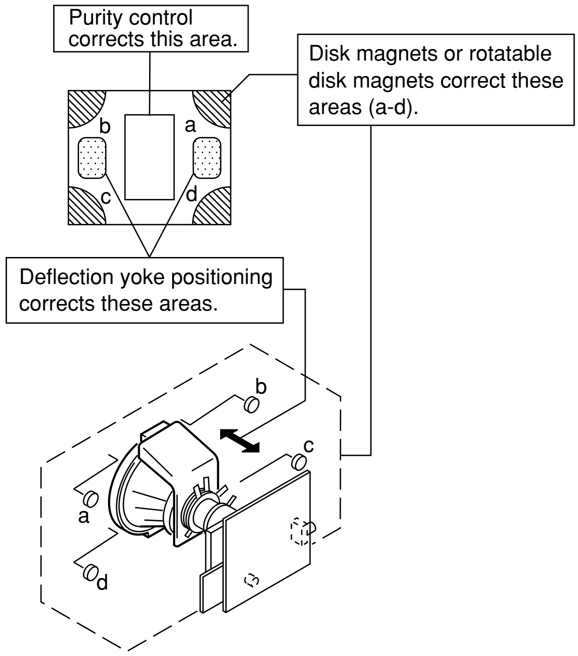

Fig. 3-5

3-2. CONVERGENCE

Preparation :

- Before starting this adjustment, adjust the focus, horizontal size and vertical size.
- Receive dot/hatch signal.
- Pic mode: Personal (Pic 90%, Brightness 50%, Col 50%, Hue 50%, Shp 50%)

(1) Horizontal and Vertical Static Convergence

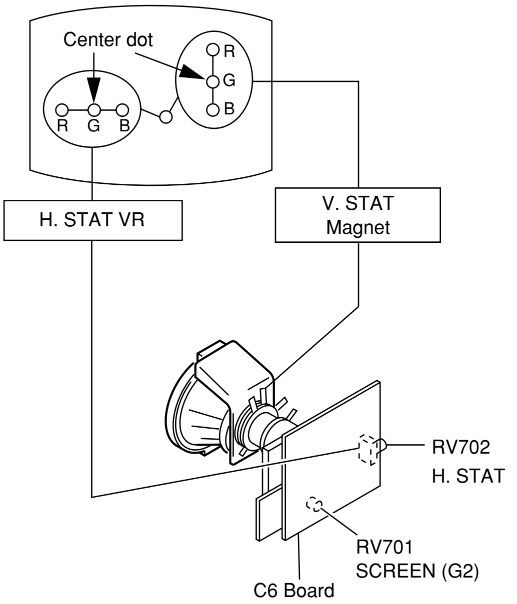

1. (Moving horizontally), adjust the H.STAT control so that the red, green and blue dots are on top of each other at the center of the screen.
2. (Moving vertically), adjust the V.STAT magnet so that the red, green and blue dots are on top of each other at the center of the screen.
3. If the H.STAT variable resistor cannot bring the red, green and blue dots together at the center of the screen, adjust the horizontal convergence with the H.STAT variable resistor and the V.STAT magnet in the manner given below.
   (In this case, the H.STAT variable resistor and the V.STAT magnet influence each other, so be sure to perform adjustments while tracking.)

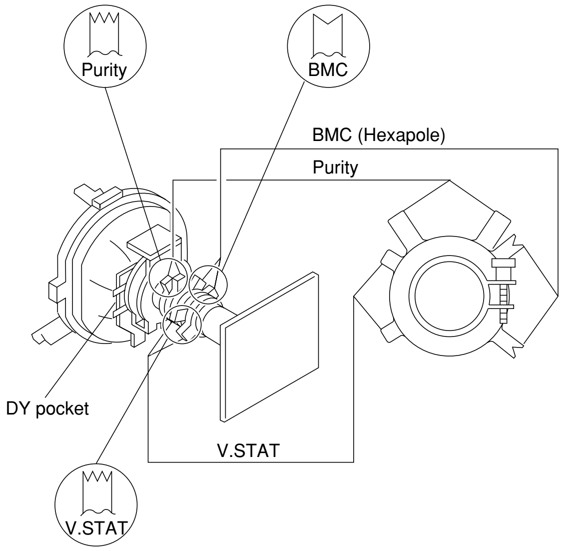

- Operation of V.STAT magnet

① V. STAT

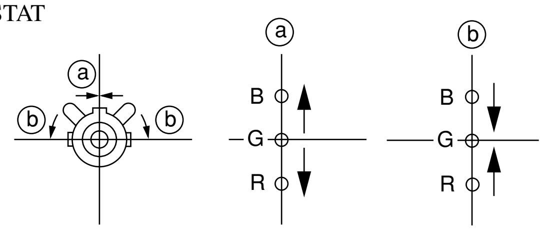

② H. STAT VR

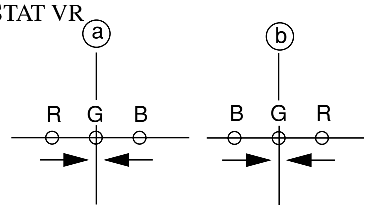

③

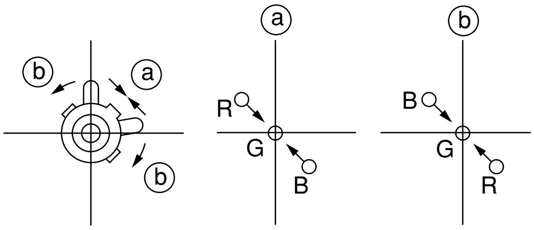

④ BMC (Hexapole) Magnet.
If the red, green and blue dots are not balanced or aligned, then use the BMC magnet to adjust in the manner described below.

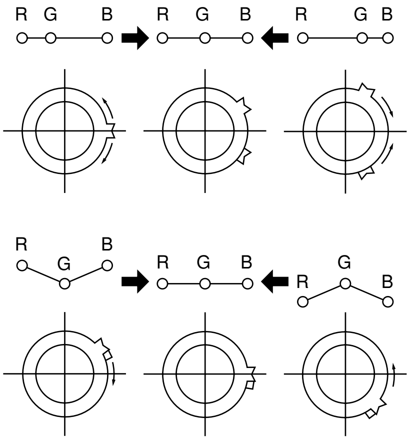

⑤ Y separation axis correction magnet adjustment.

1. Receive the cross-hatch signal and adjust [PICTURE] to [MIN] and [BRIGHTNESS] to [STANDARD] .
2. Adjust the Y separation axis correction magnet on the neck assembly so that the horizontal lines at the top and bottom of the screen are straight.

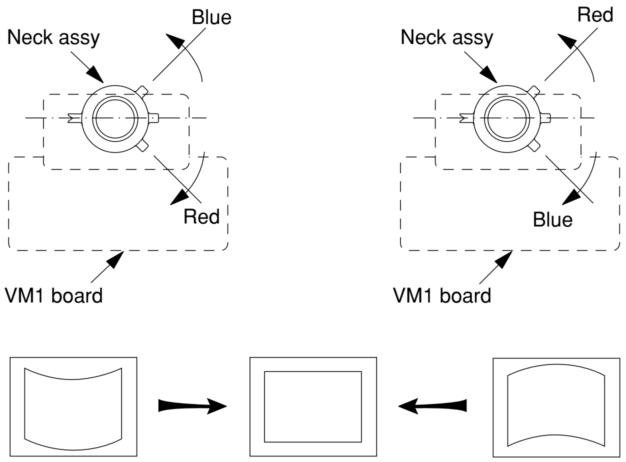

TLV	Rotate	TLV-2	VOL (29”, 34”) on DY
XCV	Rotate	XCV	Adj core on DY
YCH	Rotate	YCH	VOL on DY
TLH	Insert	TLH	Correction Plate to DY Pocket (Left or Right)

ON DY:

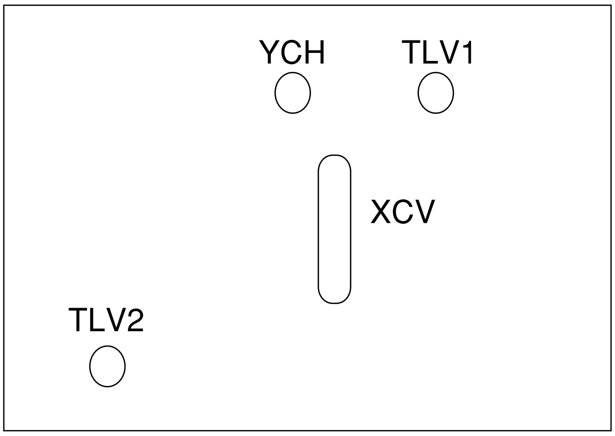

Note

1. The Red and Blue magnets should be equally far from the horizontal center line.
2. Do not separate the Red and Blue magnets too far. (Less than 8 mm)

(2) Dynamic Convergence Adjustment

Preparation:

- Before starting this adjustment, adjust the horizontal static convergence and the vertical static convergence

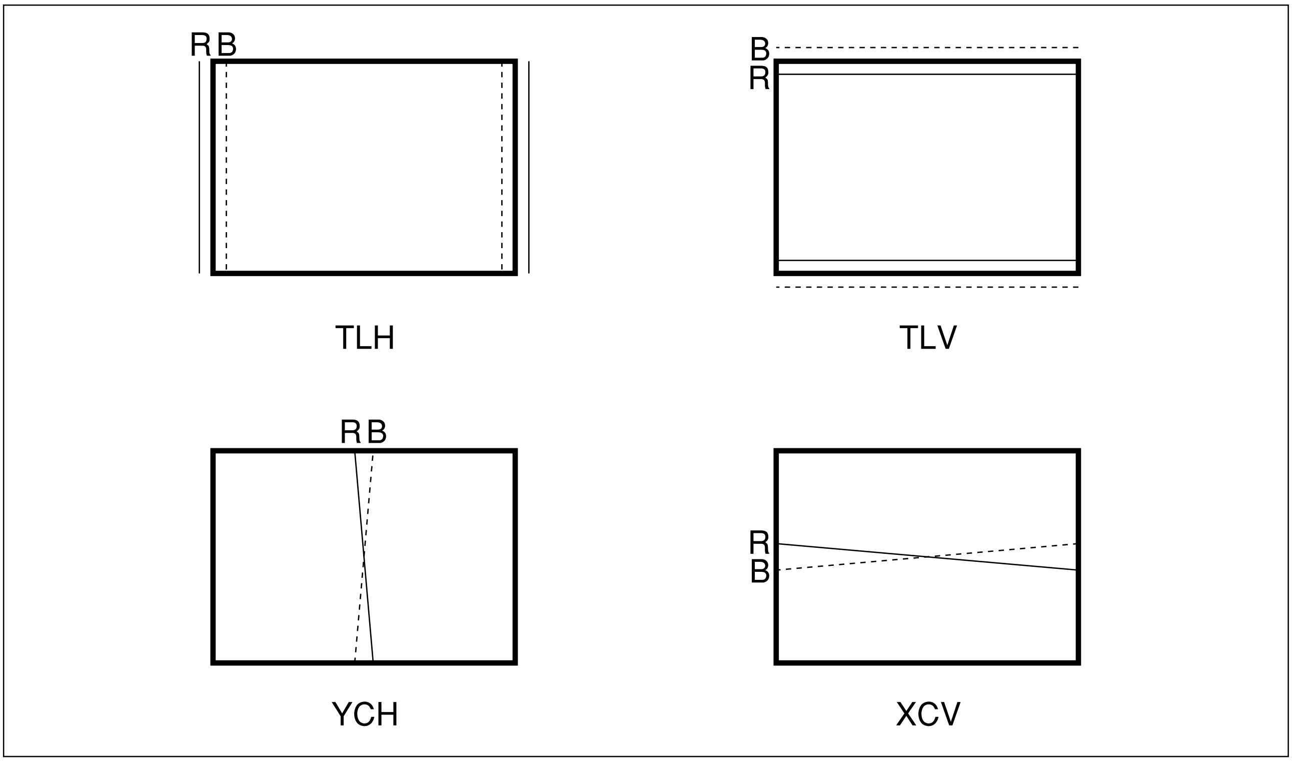

(3) Screen-corner Convergence

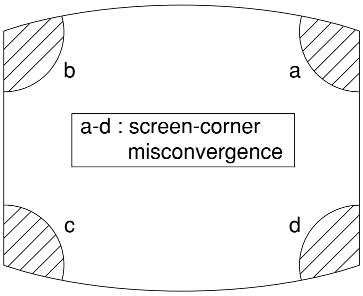

Fix a Permalloy assy corresponding to the misconverged areas.

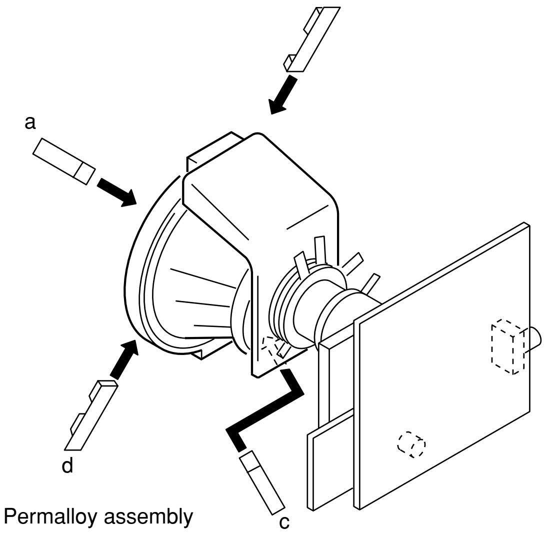

3-3. FOCUS ADJUSTMENT

Focus adjustment should be completed before W/B adjustment.

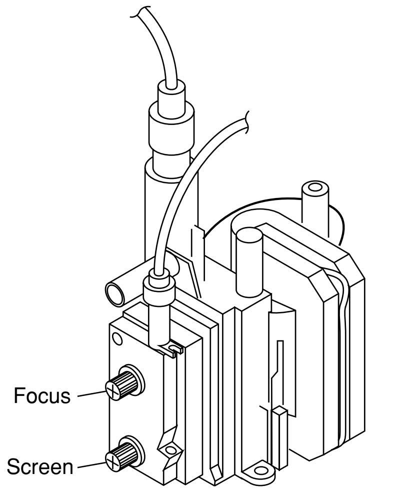

FLYBACK TRANSFORMER (T503)

FOCUS ADJUSTMENT

1) Receive digital monoscope pattern.
2) Set "AV CONTROL" to "DYNAMIC"
3) a) Adjust FOCUS VR so that center of the screen becomes just focus.
4) Change the receiving signal to white pattern and blue back.
5) Confirm MAGENTA RING is not noticeable,
   Incase magenta is very obvious, adjust a FOCUS VR to take balance between MAGENTA RING and FOCUS.

3-4. G2 (SCREEN) AND WHITE BALANCE ADJUSTMENTS

1. G2 (SCREEN) ADJUSTMENT

1) Set the PICTURE to normal.
2) Put to VIDEO input mode without signals.
3) Connect R, G and B of the C6 board cathode to the oscilloscope.
4) Adjust BRIGHTNESS to obtain the cathode voltage to the value below.
5) Adjust G2 (screen) on the FBT until picture shows the point before cut off.

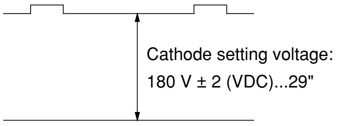

2. WHITE BALANCE ADJUSTMENT

1) Set to Service Mode (Refer Section 4-1: ADJUSTMENTS WITH COMMANDER).
2) Input white raster signal.
3) Set the PICTURE to minimum.
4) Select GCT (WHB 4) and BCT (WHB 5) with [1] and [4], and adjust the level with [3] and [6] for the best white balance.
5) Set the PICTURE to maximum.
6) Select GDR (WHB 1) and BDR (WHB 2) with [1] and [4], and adjust the level with [3] and [6] for the best white balance.
7) Write into the memory by pressing [MUTING] then [0].

3. SUB BRIGHT ADJUSTMENT

1) Set to service mode.
2) Input a staircase signal of black to white from the pattern generator.
3) BRIGHTNESS .... 50%.
   PICTURE .... MINIMUM
4) Select SBR (WHB7) with [1] and [4], and adjust SBR (WHB7) level with [3] and [6] so that the second stripe from the right is dimly lit.

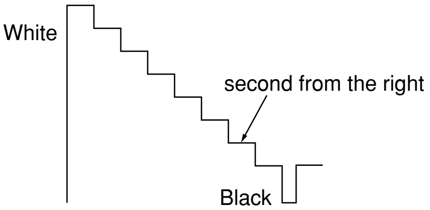

SECTION 4
CIRCUIT ADJUSTMENTS

4-1. ADJUSTMENTS WITH COMMANDER

Service adjustments to this model can be performed using the supplied Remote Commander RM-952.

a. ENTERING SERVICE MODE

With the unit on standby

→ [DISPLAY] → [5] → [VOL (+)] → [POWER]

This operation sequence puts the unit into service mode.

The screen display is :

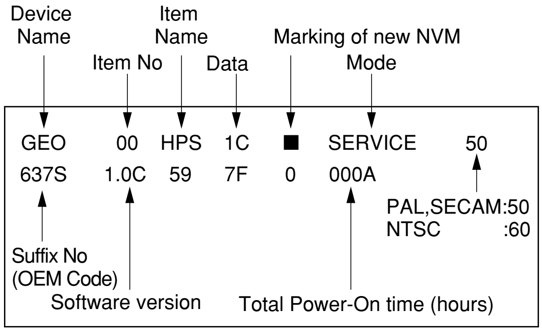

b. METHOD OF CANCELLATION FROM SERVICE MODE

Set the standby condition (Press [POWER] button on the commander), then press [POWER] button again, hereupon it becomes TV mode.

c. METHOD OF WRITE INTO MEMORY

1) Set to Service Mode.
2) Press [1] (UP) and [4] (DOWN), to select the adjustment.
4) Press [MUTING] button to indicate WRITE on the screen.
5) Press [0] button to write into memory.

d. MEMORY WRITE CONFIRMATION METHOD

1) After adjustment, pull out the plug from AC outlet, and then plug into AC outlet again.
2) Turn the power switch ON and set to Service Mode.
3) Call the adjusted items again to confirm adjustments were made.

[1], [4]	Select the adjustment item.
↓	
[3], [6]	Raise/lower the data value.
↓	
[MUTING]	Writes.
↓	
[0]	Executes the writing.

[7], [0]	All the data becomes the values in memory.
[8], [0]	All user control goes to the standard state.
[5], [0]	Service data initialization (Be sure not to use usually.)
[MUTING] + [0]	Write 50Hz adjustment data to 60Hz, or vice versa.
[2], [0]	Copy the data.

4-2. ADJUSTMENT METHOD

Item Number 00 of device GEO

This explanation uses H-Position as an example.

1. Select "GEO 00 HPS" with the [1] and [4] buttons.
2. Raise/lower the data with the [3] and [6] buttons.
3. Select the optimum state. (The standard is 1F for PAL reception.)
4. Write with the [MUTING] button. (The display changes to WRITE.)
5. Execute the writing with the [0] button. (The WRITE display will be changed to red color while excuting, and back to SERVICE.)

Example on screen display :-

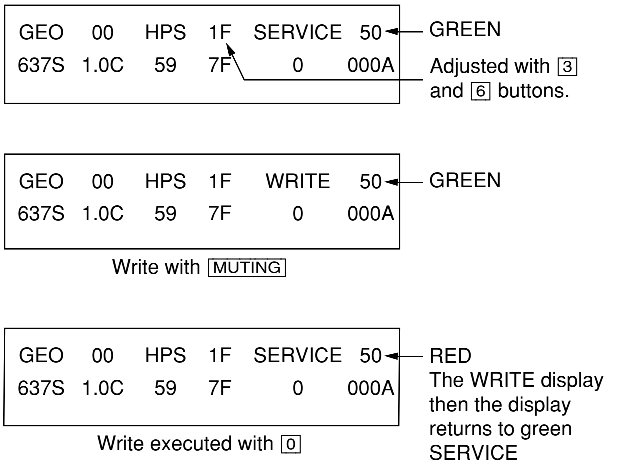

Use the same method for all Items. Use [1] and [4] to select the adjustment item, use [3] and [6] to adjust, write with [MUTING], then execute the write with [0].

Note : 1. In [WRITE], the data for all items are written into memory together.
2. For adjustment items that have different standard data between 50Hz or 60Hz, be sure to use the respective input signal after adjustment.

Adjustment Item Table

TVG Category	Functionality No.	Functionality Name	Initial	Range	Function	Table & Note
GEO	00	HPS	7	3F	H Position	Normal (50/60)/Wide (50/60)
	01	HSZ	1F	3F	H Size	Normal (50/60)/Wide (50/60)
	02	PAP	1F	3F	Pin Amp	Normal (50/60)/Wide (50/60)
	03	TLT	7	0F	Trapezium	Normal (50/60)/Wide (50/60)
	04	VPS	1F	3F	V Position	Normal (50/60)/Wide (50/60)
	05	VSZ	1F	3F	V size	Normal (50/60)/Wide (50/60)
	06	SCO	7	0F	S Correction	Normal (50/60)/Wide (50/60)
	07	VLN	7	0F	V Linearity	Normal (50/60)/Wide (50/60)
	08	BOW	7	0F	AFC Bow	Normal (50/60)/Wide (50/60)
	09	AGL	7	0F	AFC Angle	Normal (50/60)/Wide (50/60)
	0A	UPN	1F	3F	Upper Pin	Normal (50/60)/Wide (50/60)
	0B	LPN	1F	3F	Lower Pin	Normal (50/60)/Wide (50/60)
	0C	HBL	0	1	H Blanking on/off	
	0D	LBL	2	0F	Left H Blanking	Normal (50/60)/Wide (50/60)
	0E	RBL	0B	0F	Right H Blanking	Normal (50/60)/Wide (50/60)
WHB	00	RDR	25	3F	R Drive	DYNAMIC/others
	01	GDR	25	3F	G Drive	DYNAMIC/others
	02	BDR	25	3F	B Drive	DYNAMIC/others
	03	RCT	0A	0F	R Cutoff	SECAM/others
	04	GCT	7	0F	G Cutoff	SECAM/others
	05	BCT	7	0F	B Cutoff	SECAM/others
	06	BMN	15	1F	Brightness Minimum Data	
	07	SBR	1F	3F	Sub Brightness Control	
	08	APB	2	3	Sub Bright Ctl SW for PNC #3	
SAJ	00	PMX	33	3F	Picture Maximum Data	Non-Wide/Wide
	01	SHU	8	0F	Sub Hue Control	TV/Video
	02	SSH	3	0F	Sub Sharpness Control	TV/Video
	03	SCL	1F	3F	Sub Color Control	(NTSC/others)/Wide (NTSC/others)
VP	00	EHT	4	0F	EHT Comp	50/60Hz
	01	GMA	2	03	Gamma Correction	Refer NVM Map A4
	02	APG	0	1	Gamma Ctl SW for PNC #3	
	03	YDL	6	0F	Y Delay	PAL/SECAM/NTSC
	04	SST	1	03	SECAM ID Start Position	SECAM/PAL
	05	SSP	1	03	SECAM ID Stop Position	SECAM/PAL
	06	RLM	0	3	RGB Limit	
	07	SLV	2	03	SECAM ID Level	SECAM/PAL
	08	SBF	22	3F	SECAM BELL f0	SECAM/PAL
	09	DYC	1	1	Dynamic Color on/off	
	0A	ABL	1	1	ABL Mode Switching	STANDARD Always 0
	0B	VTH	1	1	ABL Detection Vth Switching	
	0C	SFO	1	1	FO Switching for Sharpness	NTSC/others
	0D	DCX	1	1	DC Trans. Ratio Switching	

Adjustment Item Table

TVG Category	Functionality No.	Functionality Name	Initial	Range	Function	Table & Note
VP	0E	SHT	1	1	Pre-/Overshoot ratio Switch	NTSC/others
	0F	HDW	0	1	H Drive Pulse Width Switch	
	10	AFC	1	03	AFC Gain Control	TV/Video/Text
	11	HOS	7	0F	H Oscillation	
	12	HSS	0	1	Slice Level of H Sync Sep.	
	13	VSS	0	1	Slice Level of V Sync Sep.	
	14	HMS	1	1	Macro Vision C/m off/on	50/60Hz
	15	YUV	0	1	YUV Switch Control	
	16	CDV	1	3	CD mode for Video	Video only
	17	RON	1	1	R ON	not memorized
	18	GON	1	1	G ON	not memorized
	19	BON	1	1	B ON	not memorized
	1A	PON	1	1	P ON	not memorized
	1B	AXN	1	1	AXIS SW	NTSC/others (only for Dyna)
	1C	RSL	0	1	RGB SEL	
	1D	VBW	1	3	VBLKW	
	1E	RFP	0	1	REFP	
	1F	JMP	0	1	Jump	
	20	VMC	2	3	VM Off	
AP	00	INF	5	3F	Input Attenuation When surround off	
	01	INS	0A	3F	Input Attenuation When surround on (XG-ONLY)	
	02	SEF	0	0F	Surround Effect Control (XA-ONLY)	
	03	PH1	3	3	Phase 1 Register Selection	
	04	PH2	0	3	Phase 2 Register Selection (XG-ONLY)	
	05	PH3	0	3	Phase 3 Register Selection (XG-ONLY)	
	06	PH4	0	3	Phase 4 Register Selection (XG-ONLY)	
	07	BCS	2	3	Bass Center Shift	
	08	TCS	2	3	Treble Center Shift	
	09	TRF	2	3	RF Treble Offset	
MSP	00	WST	15	FF	W/G Stereo Threshold	
	01	WBT	EA	FF	W/G Bilingual Threshold	
	02	WLL	5	FF	W/G Monaural Threshold	
	03	WAC	0	0F	W/G Agreement Count	
	04	WDL	30	FF	W/G Search Delay	
	05	NDL	20	FF	NICAM Search Delay	
	06	SDL	10	FF	Stereo Status Read Delay	
	07	AGC	1	1	AGC Switch Auto/Constant	
	08	REL	28	3F	AGC Gain at Constant Mode	
	09	CRM	0	1	Carrier muting on/off	
	0A	ACO	1	1	Audio Clock out on/off	

Adjustment Item Table

TVG	Functionality		Init.	Range	Function	Table & Note
Category	No.	Name				
MSP	0B	FP	1B	7F	FM Prescale for non-M system	
	0C	FPM	32	7F	FM Prescale for M system	
	0D	FH	36	7F	FM Prescale for HDEV	
	0E	FHM	65	7F	FM Prescale for HDEV and M	
	0F	WGP	2A	7F	W/G Prescale	
	10	NIP	6D	7F	NICAM Prescale	
	11	ERR	50	FF	Auto FM Switch Threshold	
	12	VOL	6D	FF	Speaker Gain 7000h to 7ff0h	
TXT	00	TXH	0	3	Teletext Horizontal Position	
	01	TXV	0	3	Teletext Vertical Position	
OPM	00	OSH	0A	3F	OSD H Position	Option-Misc
	01	COM	1	03	Comb Selection	
	02	APC	1	1	APC Switch	
	03	TSY	0	03	TV Sys at Auto TV Sys	
	04	MUT	0	1	No Signal Mute	
	05	AFM	0	1	Auto FM Switch	
	06	RFB	0	3	C-BPF Control	
	07	TVO	0	7	Tilt to V-Angle Offset	
	08	DBL	0	1	Disable Blueback Function	
	09	SCH	1	7F	CH Selection for Shipping Condition	NTSC Models only
	0A	SCA	1	1	Cable / Air selection for shipping condition	NTSC Models only
OPB	00	OP1	FF	FF	Optional Bits 1 (see below)	Option-Bits
	01	OP2	62	FF	Optional Bits 2 (see below)	
	02	OP3	B1	FF	Optional Bits 3 (see below)	
	03	OP4	02	FF	Optional Bits 4 (see below)	

NOTE

- shaded items are fixed data.
- Standard data listed on the Adjustment Item Table are reference values, therefore it may be different for each model and for each mode.
- Note for Different Data Those are the standard data values written on the microprocessor. Therefore, the data values of the modes and stored respectively in the memory.
  In case of a device replacement, adjustment by rewriting the data value is necessary for some items.

OPTION NOTE

OP1

Item	XTAL 4.43	XTAL 3.58	SECAM	2nd. Lang	B/G	I	D/K	M
KV-XJ29M50	1	1	1	1	1	1	1	1
KV-XJ29M61	1	1	1	1	1	1	1	1

NOTE: When Bit 7, 6 & 5 = 000, Only PAL color system is selected.
When Bit 7 is selected, Auto, PAL & NTSC 4.43 Color system is enable.
When Option is single color system, Color system cannot be changed & "AUTO" will not be displayed.

OP2

Item	TOP	NICAM	HDEV	Thai Bil	Dis Fav.	DVD Input	AV Input	
KV-XJ29M50	0	1	1	0	0	1	1	0
KV-XJ29M61	0	1	1	0	0	1	1	0

AV Input — 00 = no AV Input — 01 = 1 AV Input
10/11 = 2 AV Input
DVD Input — Effective only when "AV Input" is set to 2 AV Input
Dis Fav. — Disable Favorite Channel (Only Effective For 21" & 14" Models Only)

OP3

Item	PIC Rot[*1]	2199 Curve[*1]	Auto PIC	A-TV sys	US ST	AV Mono[*1]	11 KEY	Color SW[*2&*1]
KV-XJ29M50	1	0	1	1	0	0	0	1
KV-XJ29M61	1	0	1	1	0	0	0	1

PIC Rot[*1] — PIC Rotation Feature Switch — 0 = disabled, 1 = enabled
2199 Curve[*1] — 2199 Volume Curve Selection — 0 = Others, 1 = 2199 Volume Curve.
Auto PIC — Auto Picture Improvement — 0 = inactive, 1 = active
A-TV sys — Auto TV System in Auto Program — 0 = disabled, 1 = enabled
US ST — USA Stereo — 0 = disabled, 1 = enabled
AV MONO[*1] — AV Mono models — 0 = Stereo, 1 = Mono
(No Balance & Surround selection)
11 Key — Front Key Selection — 0 = 7 key model, 1 = 11 key model
Color SW[*2&*1] — Color Data Selection in Dynamic Mode — 0 = 65 (No PIP), 1 = 57 (PIP)

Note: *1 - For XA-21/XG25 Models Only
*2 - For XA-34/29/25 Models Only

OP4

Item	(unused)	(unused)	(unused)	(unused)	(unused)	Vid NTSC 3.58	AP_XG[*1]	(unused)
KV-XJ29M50	0	0	0	0	0	0	1	0
KV-XJ29M61	0	0	0	0	0	0	1	0

AP_XG[*1] — To select the XG AP (board B6) 0: No; 1 = Yes

Note: *1 - For XA-21/XG25 Models Only

4-3. PICTURE QUALITY ADJUSTMENTS

SUB COLOR ADJUSTMENT

1. Input a PAL color-bar.
2. Set to the following condition:
   PICTURE 100%, BRIGHTNESS 50%, COLOR 50%
3. Connect an oscilloscope to pin ① (B OUT) of CN305, A board.
4. Set to Service Mode and select SAJ 3 'SCL' with [1] and [4] of the commander then adjust to VB2=VB3=VB4 with [3] and [6].
5. Press [MUTING] → [0] of the commander to write the data.
6. Adjust SAJ 3 'SCL' as step 2 to 5 when receiving NTSC color-bar.

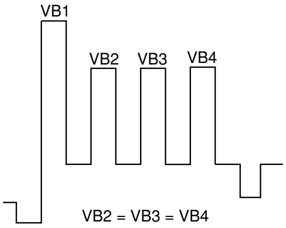

VB2 = VB3 = VB4 (Difference is within 70mV)

SUB HUE ADJUSTMENT

1. Select Video 3.58.
2. Input a NTSC, color-bar, video into Video.
3. Set the following condition:
   PICTURE 100%, BRIGHTNESS 50%, COLOR 50%
4. Connect an oscilloscope to pin ① (B OUT) of CN305, A board.
5. Select SAJ 1 'SHU' with [1] and [4] of the commander by setting to Service Mode and adjust to VB1=VB2=VB3=VB4 with [3] and [6].

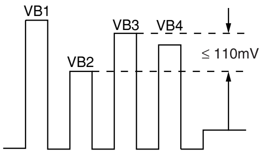

VB1 = VB2 = VB3 = VB4

The highest level of VB1,VB2,VB3,VB4 must be aligned at the same line. Ideal difference level between VB2 and VB3 should be within ± 110mV.

6. Press [MUTING] → [0] of the commander to write the data.

4-4. DEFLECTION ADJUSTMENT

1. Set to Service Mode.
2. Input PAL color bar.
3. Using the [1] and [4] button, select category GEO (Service Mode).
4. Raise/lower the data using the [3] and [6] buttons.
   Select and adjust the following items to obtain optimum image.

Service Item

GEO :	00	HPS	H POSITION
	01	HSZ	H SIZE
	02	PAP	PIN AMP
	03	TLT	TILT
	04	VPS	V POSITION
	05	VSZ	V SIZE
	06	SCO	S CORRECTION
	07	VLN	V LINEARITY
	08	BOW	AFC BOW
	09	AGL	AFC ANGLE
	0A	UPN	UPPER CORNER PIN
	0B	LPN	LOWER CORNER PIN

5. Input 525/60Hz signal.
6. Using the [1] and [4] button select category GEO (Service Mode).
7. Select and adjust the following items to obtain optimum image. Raise/lower the data with the [3] and [6] buttons.

Service Item

GEO :	00	HPS	H POSITION
	01	HSZ	H SIZE
	02	PAP	PIN AMP
	03	TLT	TILT
	04	VPS	V POSITION
	05	VSZ	V SIZE
	06	SCO	S CORRECTION
	07	VLN	V LINEARITY
	08	BOW	AFC BOW
	09	AGL	AFC ANGLE
	0A	UPN	UPPER CORNER PIN
	0B	LPN	LOWER CORNER PIN

4-5. H-TRAPEZOID ADJUSTMENT

1. Receive cross hatch/dot signal.
2. Adjust RV1801 on C6 board to make H-trapezoid distortion best.

4-6. A BOARD ADJUSTMENT AFTER IC003 (MEMORY) REPLACEMENT

1. Enter to Service Mode.
2. Press commander buttons [5] and [0] (Data Initialize), and [2] and [0] (Data Copy) to initialize the data.
3. Call each item number and check if the respective screen shows the normal picture.
   In cases where items are not well adjusted, rectify the items with fine adjustment.
   Write the data per each item number ([MUTING] +[0]).
4. Select item numbers "OPB0" (OP1), "OPB1" (OP2), "OPB2" (OP3), "OPB3" (OP4) and respectively set the bit per model with command buttons [3] and [6].
5. Press commander buttons [8] and [0] (Test Normal) to return to the data that was set on the shipment from the factory. (This will also cancel Service Mode.)

4-7. PICTURE DISTORTION ADJUSTMENT (1)

Item Number 00 – 0B

GEO 0 HPS (H POSITION)

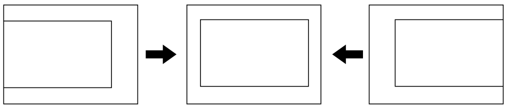

GEO 1 HSZ (H SIZE)

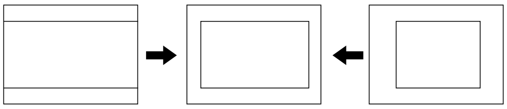

GEO 2 PAP (PIN AMP)

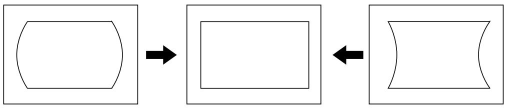

GEO 3 TLT (TRAPEZIUM)

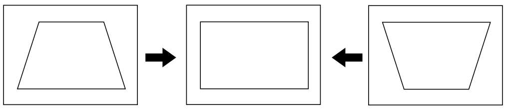

GEO 4 VPS (V POSITION)

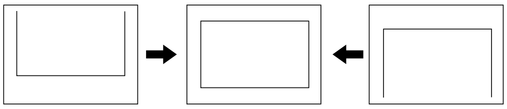

GEO 5 VSZ (V SIZE)

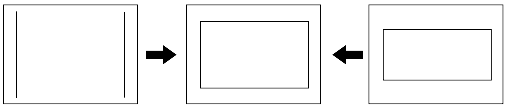

GEO 6 SCO (VERTICAL S-Correction)

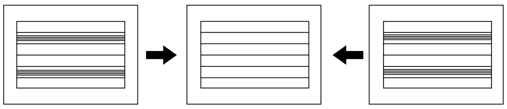

GEO 7 VLN (V LINEARITY)

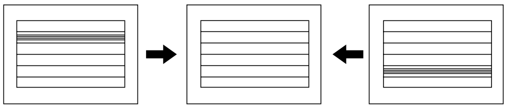

GEO 8 BOW (AFC.BOW)

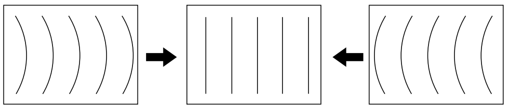

GEO 9 AGL (AFC.ANGLE)

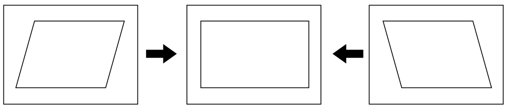

GEO 0A UPN (UPPER CORNER PIN)
GEO 0B LPN (LOWER CORNER PIN)

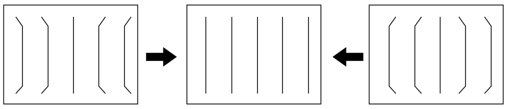

PICTURE DISTORTION ADJUSTMENT (2)

H-TRAPEZOID (Rotate RV1801)

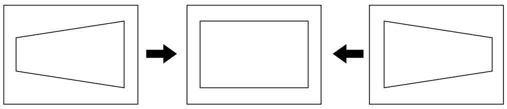

SECTION 5 DIAGRAMS

5-1. BLOCK DIAGRAM

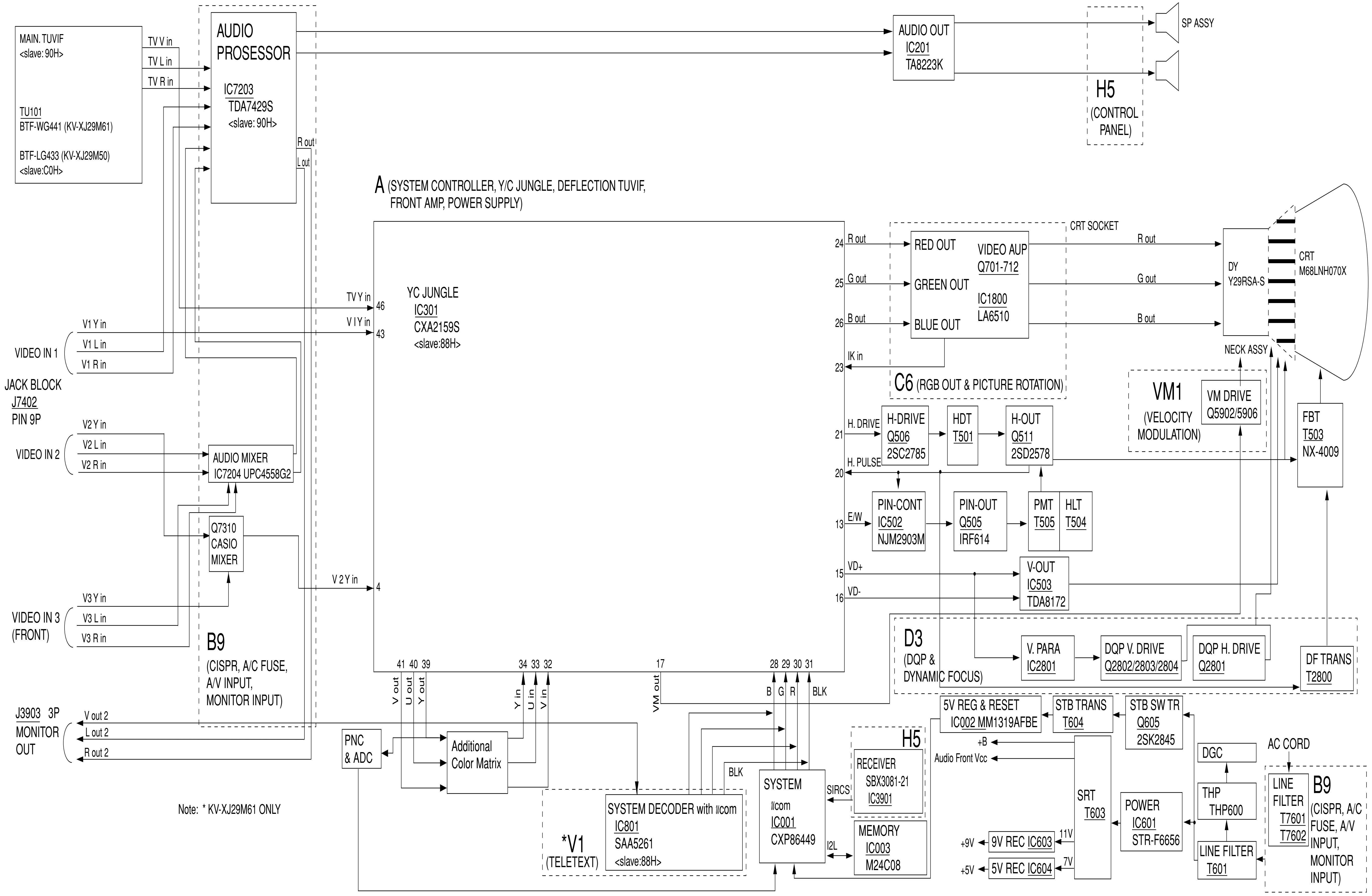

5-2. CIRCUIT BOARDS LOCATION

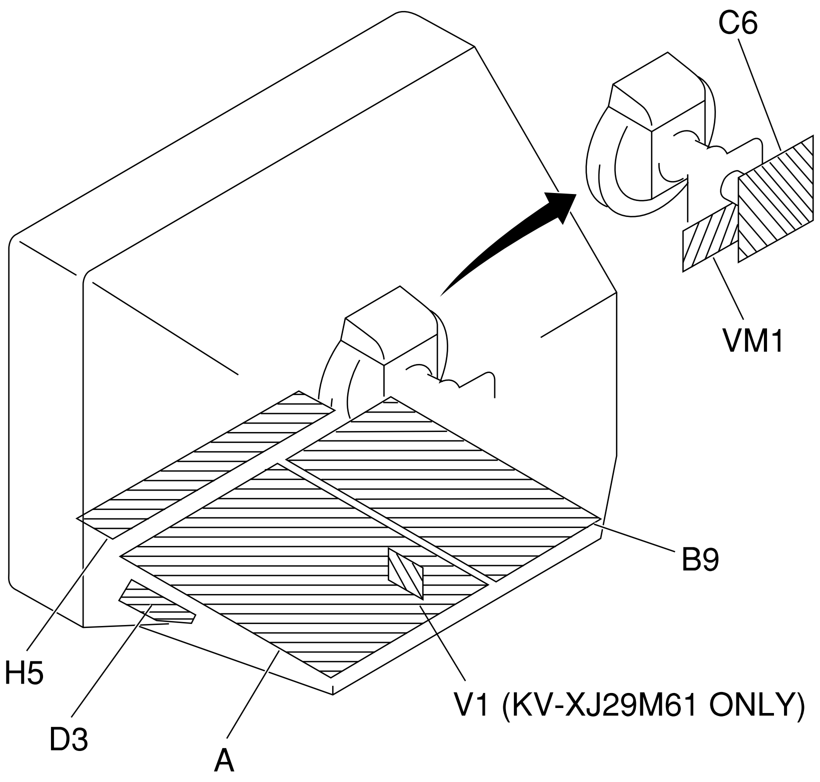

5-3. SCHEMATIC DIAGRAM

Note:

- All capacitors are in μF unless otherwise noted.
- All electrolytic capacitors are rated at 50V unless otherwise noted.
- All resistors are in ohms.
  kΩ = 1000Ω, MΩ = 1000kΩ
- Indication of resistance which does not have rating electrical power is as follows.

Pitch: 5 mm Rating electrical power 1/4W (CHIP: 1/10W)

- : nonflammable resistor.
- △ : internal component.
- : panel designation or adjustment for rrepair.
- All variable and adjustable resistors have characteristic curve B unless otherwise noted.
- **Redings are taken with a color-bar signal input.**
  no mark : COMMON
  ( ) : PAL
  [ ] : NTSC 3.58
- **Readings are taken with a 10MΩ digital multimeter.**
- **Voltage are dc with respect to ground unless otherwise noted.**
- **Voltage variations may be noted due to normal production tolerances.**
- **All voltage are in V.**
- **✻ : Cannot be measured.**
- **Circled numbers are waveform references.**
- **: B +bus.**
- **: B –bus.**
- **⇨ : signal path.**

Reference information

RESISTOR	: RN	METAL FILM
	: RC	SOLID
	: FPRD	NONFLAMMABLE CARBON
	: FUSE	NONFLAMMABLE FUSIBLE
	: RS	NONFLAMMABLE METAL OXIDE
	: RB	NONFLAMMABLE CEMENT
	: RW	NONFLAMMABLE WIREWOUND
	: ✻	ADJUSTMENT RESISTOR
COIL	: LF-8L	MICRO INDUCTOR
CAPACITOR	: TA	TANTALUM
	: PS	STYROL
	: PP	POLYPROPYLENE
	: PT	MYLAR
	: MPS	METALIZED POLYESTER
	: MPP	METALIZED POLYPROPYLENE
	: ALB	BIPOLAR
	: ALT	HIGH TEMPERATURE
	: ALR	HIGH RIPPLE

Note: The component identified by shading and mark ⚠ are critical for safety. Replace only with part number specified.

(1) Schematic Diagram of B9 Board

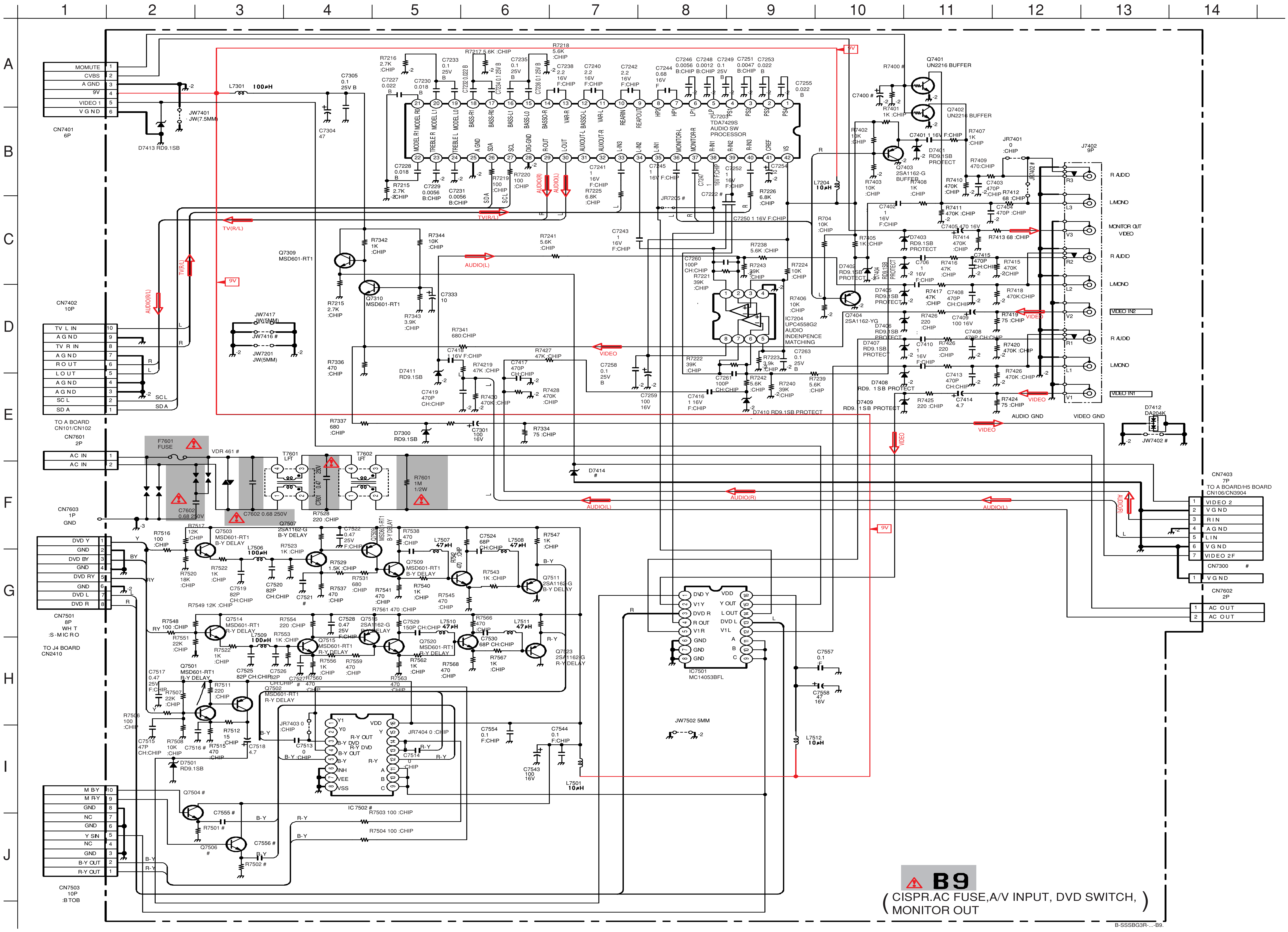

(2) Schematic Diagram of A Board

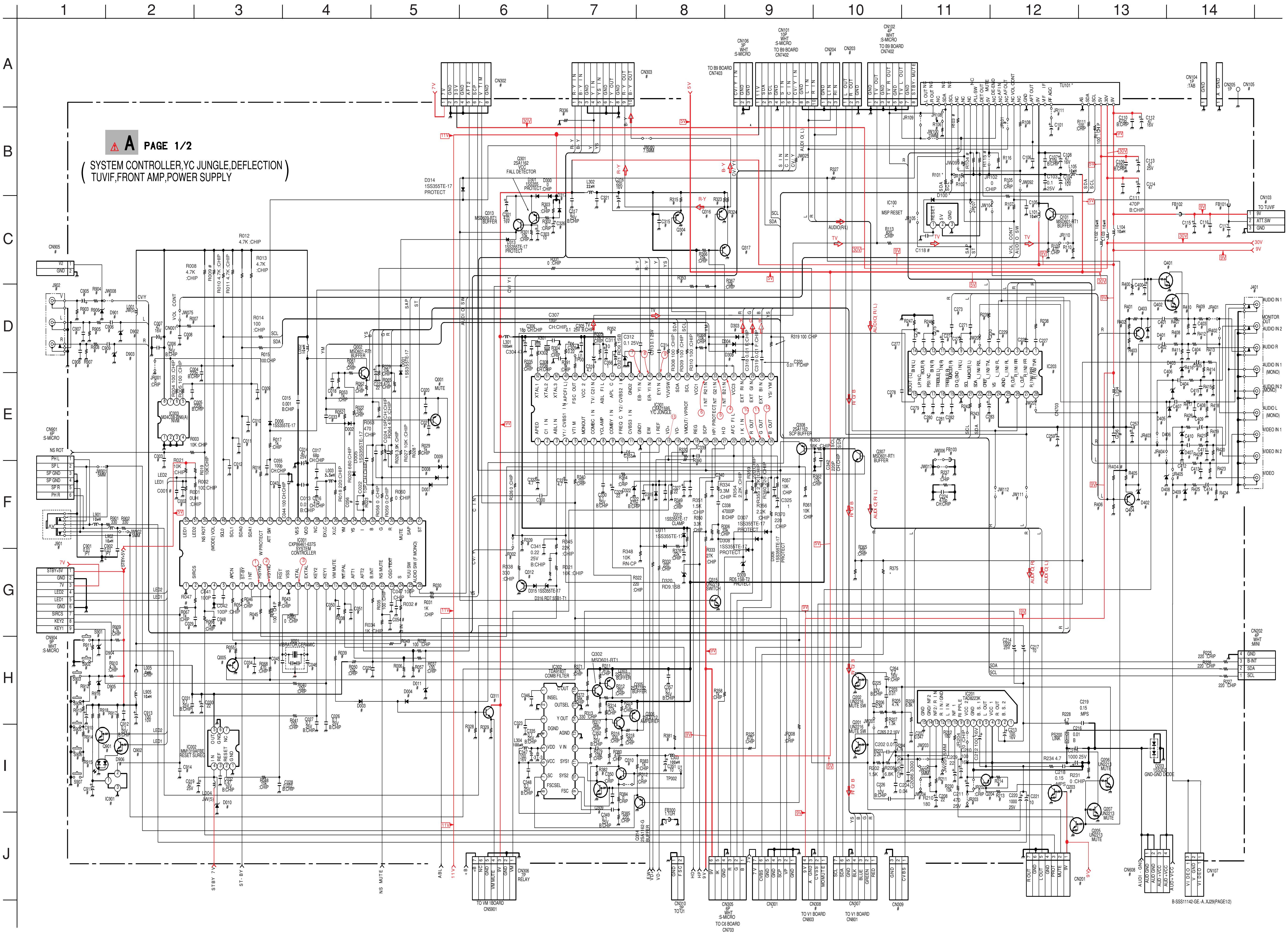

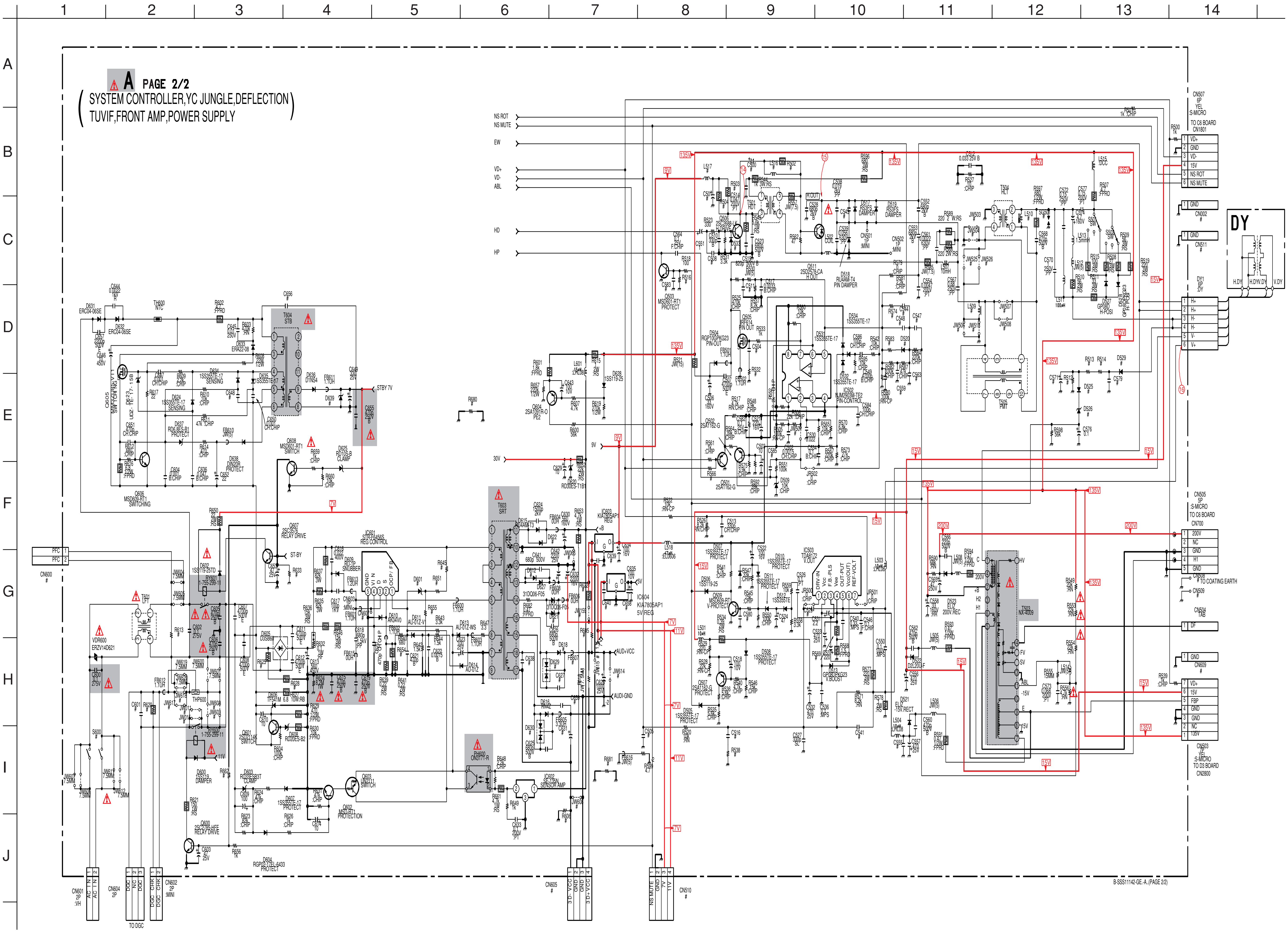
A PAGE 2/2
SYSTEM CONTROLLER,YC JUNGLE,DEFLECTION
TUVIF,FRONT AMP,POWER SUPPLY
NS ROT
NS MUTE
EW
VD+
VD-
ABL
HD
HP
30V
9V
STBY 7V
DY
CN507 6P YEL S-MICRO TO C6 BOARD CN1801
CN505 5P S-MICRO TO C6 BOARD CN700
CN503 7P YEL S-MICRO TO D3 BOARD CN2800
CN600
CN601 2P :VH
CN604 2P
TO D3C
CN602 2P :MINI
CN605
CN510
T603 SRT
T503 NX-4009
T604 STB
IC601 STR-F6456S REG CONTROL
IC503 TDA8172 V.OUT
IC604 KIA7805AP1 5V REG
IC602 SE135N SENSOR AMP
AUD+VCC
AUD-GND
TO COATING EARTH
B-SSS11142-GE-A (PAGE 2/2)

KV-XJ29M50/XJ29M61
RM-952

(3) Schematic Diagram of C6 Board

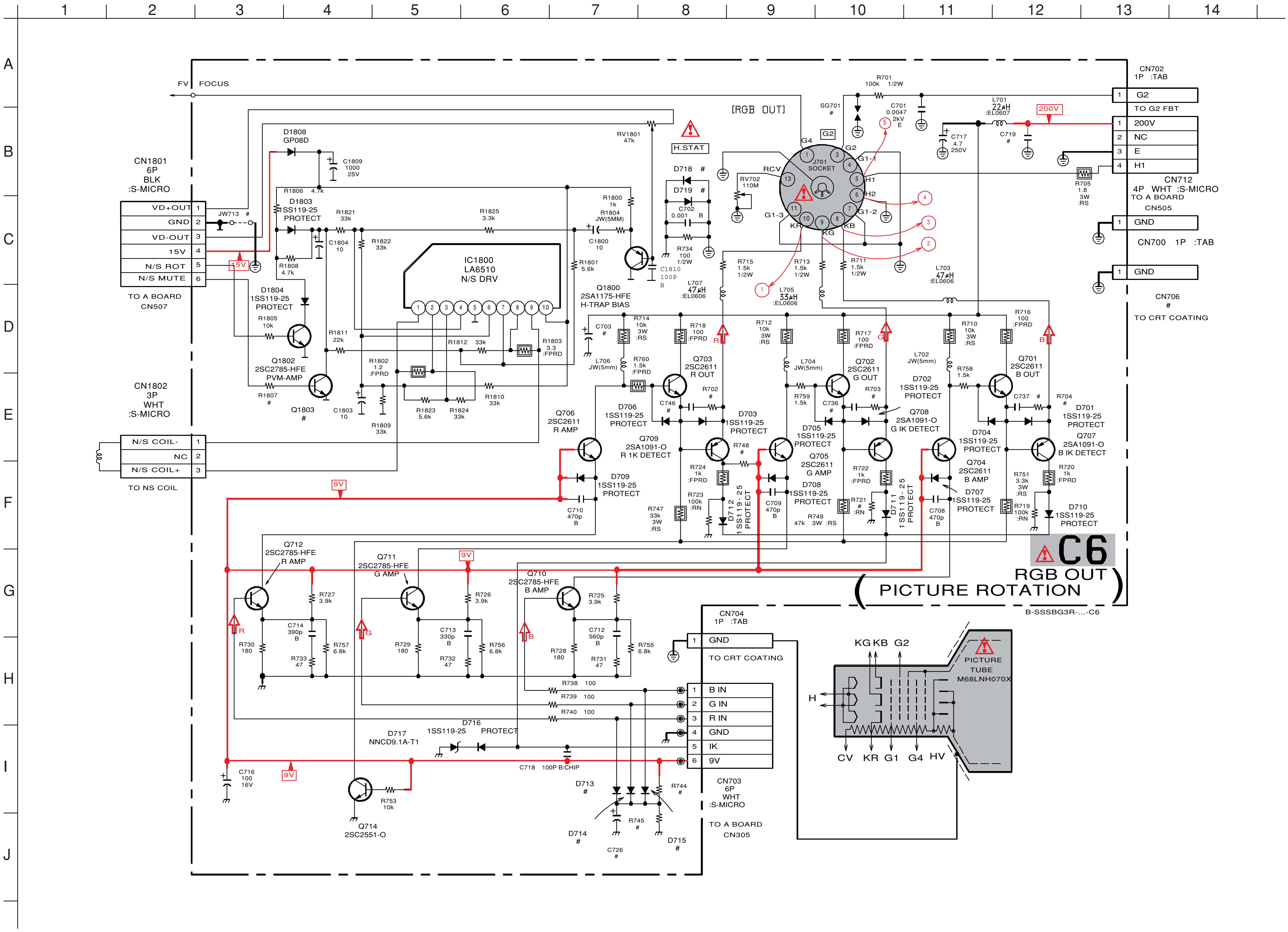

KV-XJ29M50/XJ29M61
RM-952

(4) Schematic Diagram of H5 Board

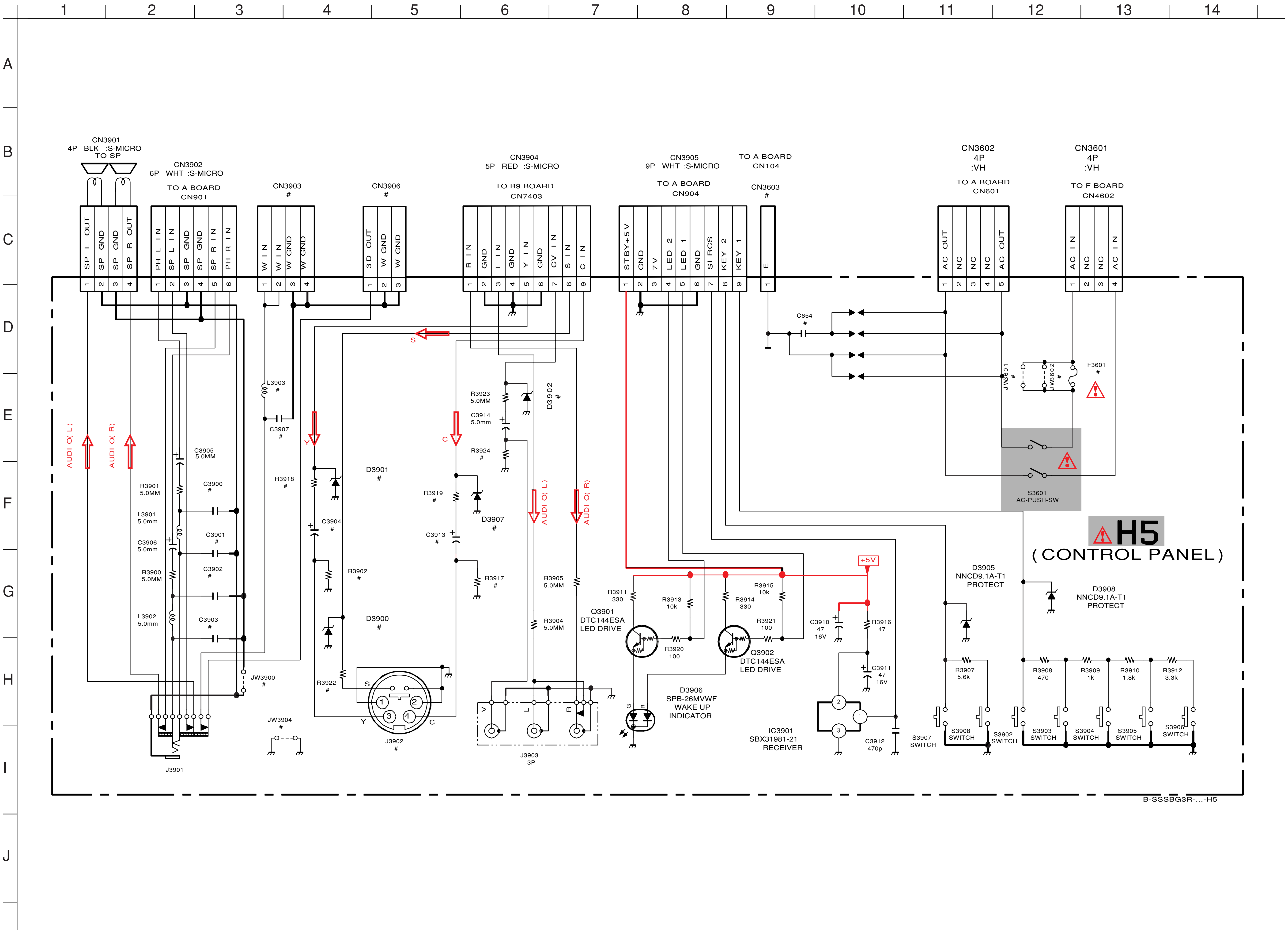

(5) Schematic Diagram of V1 Board

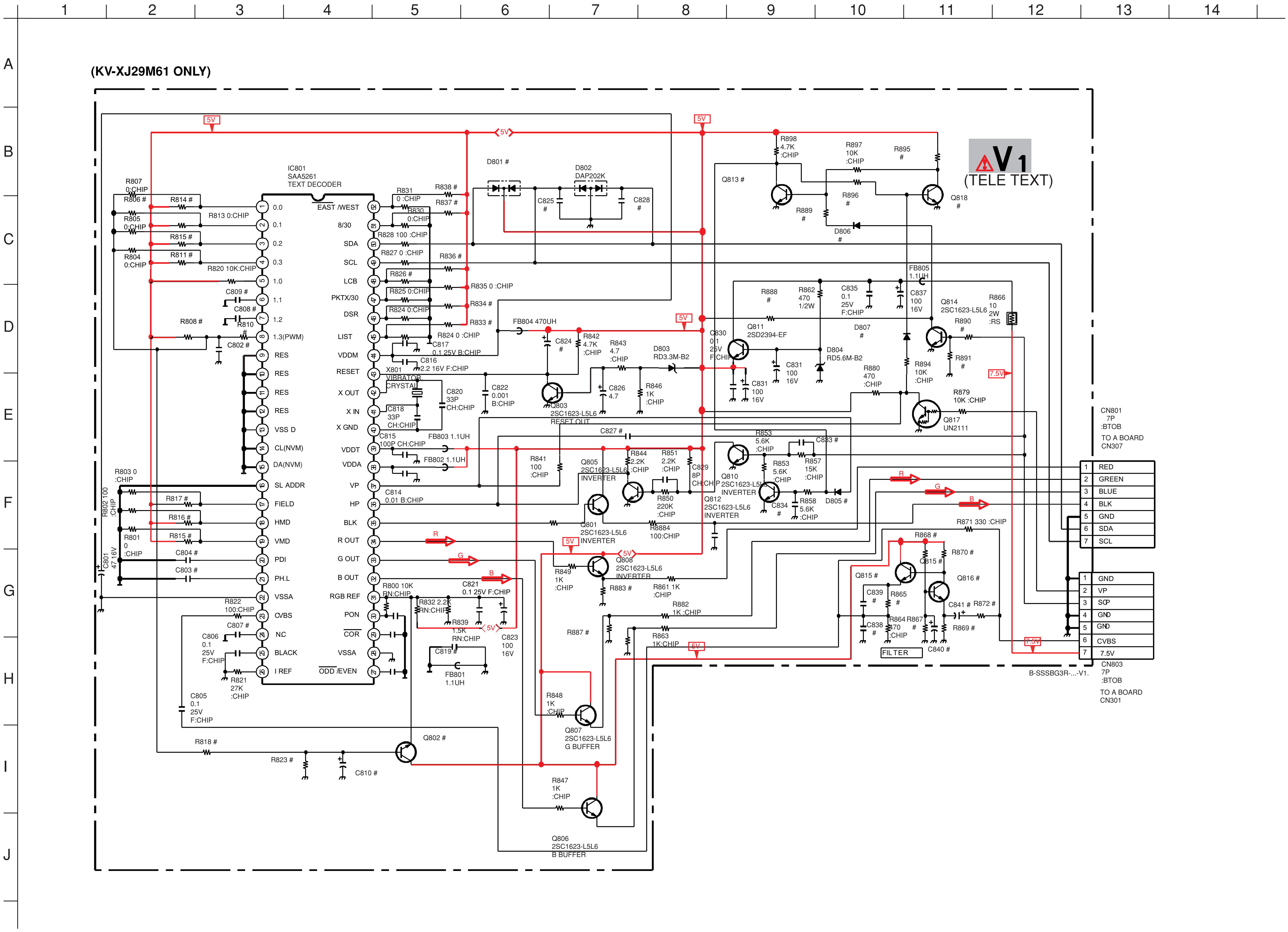

(6) Schematic Diagram of VM1 Board

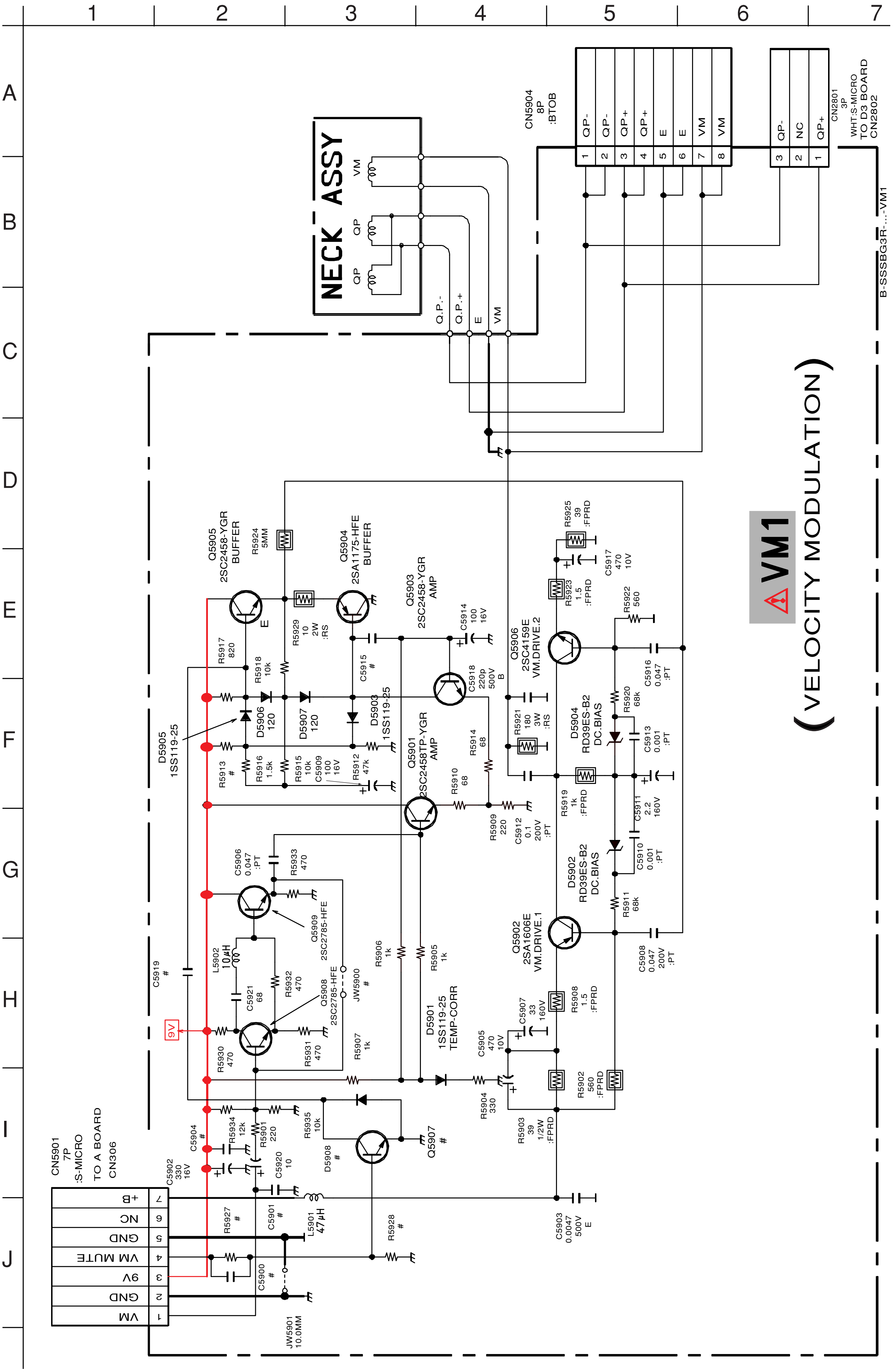

(7) Schematic Diagram of D3 Board

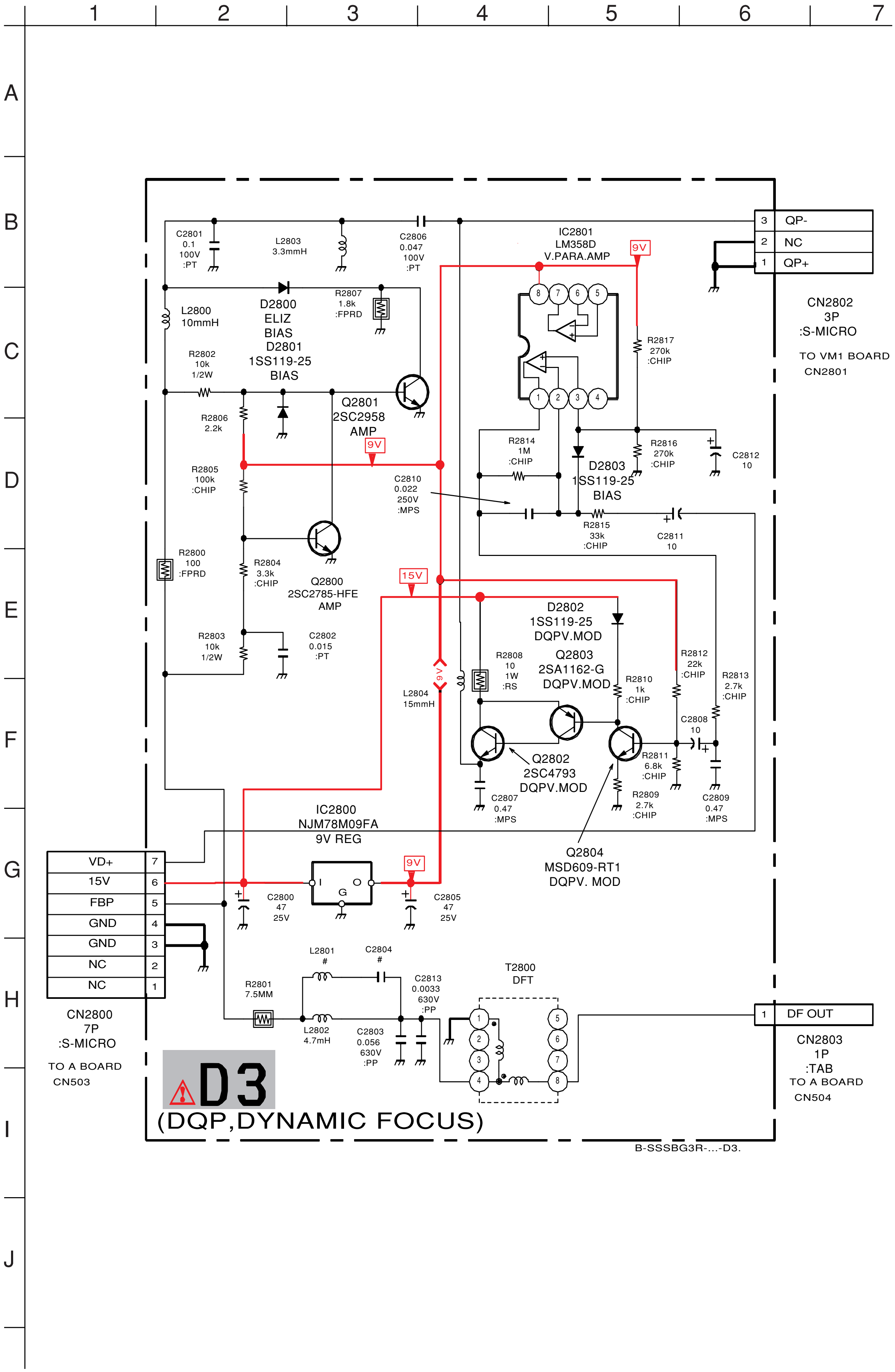

(8) Schematic Diagram of J4 Board

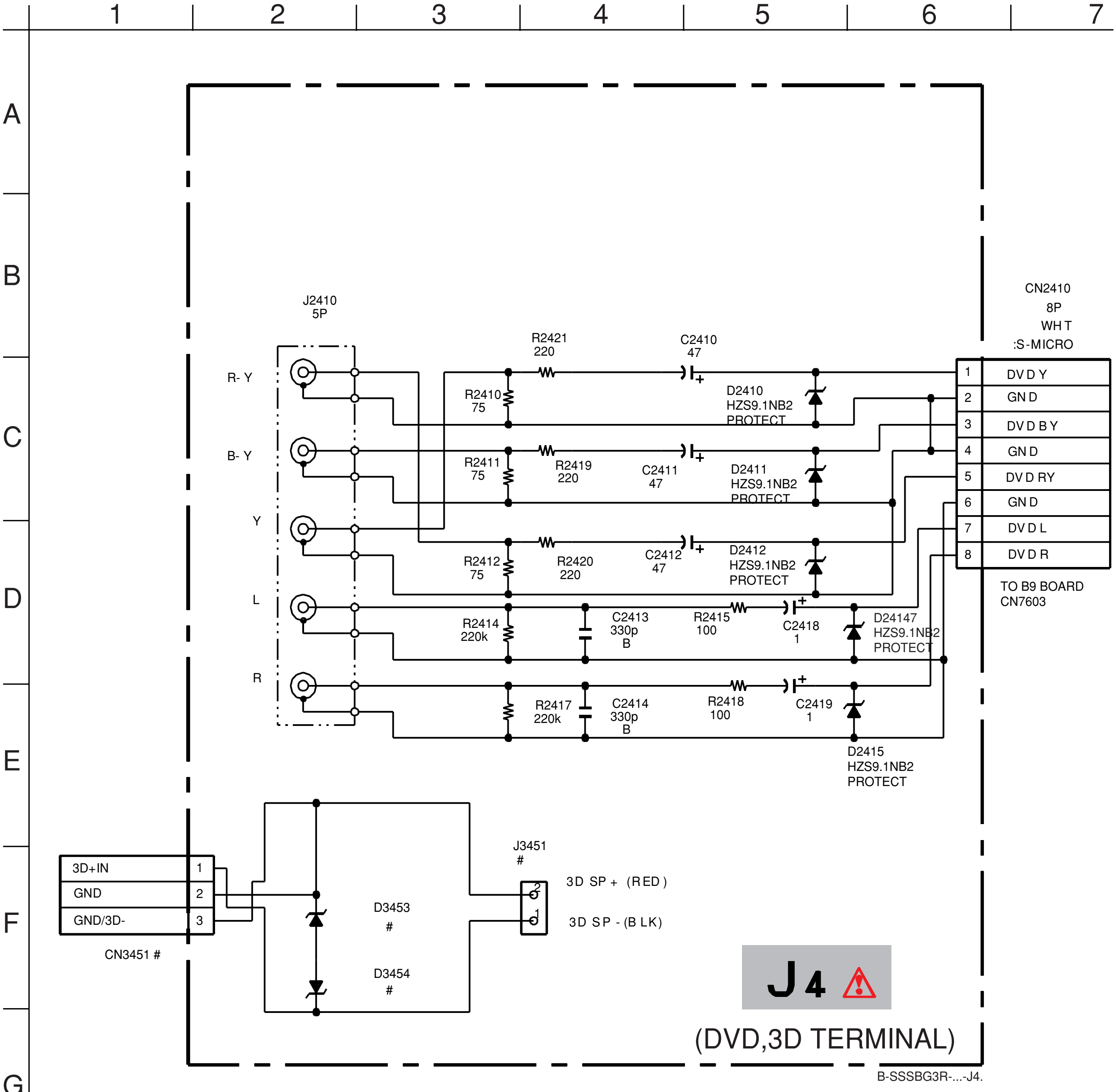

A Board ✻ Mark List

	KV-XJ29M50	KV-XJ29M61
CN301	#	7P
CN307	#	7P
D100	#	MA111-TX
IC100	#	S-80743AL-A7-S
JR107	#	0: CHIP
JR109	0: CHIP	#
R028	#	10K
R101	#	100: CHIP
R102	#	100: CHIP
R375	#	100: CHIP
TU101	BTF-LG433	BTF-WG441

Note: The parts indicated as "#" in this circuit diagram are not listed here, as they are not used for these models.

5-4. VOLTAGE LIST MEASUREMENT

A (1/2) BOARD VOLTAGE LIST

Ref	Pin No	Voltage[v]
IC001	1	0
	2	4.9
	3	*
	4	5.0
	5	5.0
	6	0
	7	3.9
	8	4.9
	9	0.4
	10	4.9
	11	5.0
	12	0
	13	2.2
	14	2.1
	15	5.0
	16	(5.0)[0.2]
	17	0
	18	0
	19	2.8
	20	*
	21	5.0
	22	0
	23	5.0
	24	*
	25	*
	26	5.0
	27	(3.9)[4.9]
	28	5.0
	29	4.9
	30	0
	31	0
	32	0
	33	5.0
	34	(*)[0]
	35	0
	36	2.6
	37	2.5
	38	4.9
	39	5.0
	40	0
	41	1.0
	42	1.0
	43	0
	44	5.0
	45	5.0
	46	4.6
	47	5.0
	48	4.6
	49	4.6
	50	0
	51	0
	52	0
IC002	1	0
	2	5.0
	3	4.9
	4	7.3
	5	5.9
	6	0
	7	*
IC003	1	0
	2	0
	3	0
	4	0
	5	5.0
	6	5.0
	7	5.0
	8	5.0

Ref	Pin No	Voltage[v]
IC100	1	4.9
	2	5.0
	3	0
IC201	1	1.3
	2	22.2
	3	11.7
	4	22.6
	5	11.7
	6	22.2
	7	0
	8	22.5
	9	11.6
	10	0.6
	11	0
	12	0
	13	0
	14	0.6
	15	0
IC301	1	3.3
	2	(3.4)[5.0]
	3	2.3
	4	5.0
	5	4.8
	6	4.3
	7	5.4
	8	4.5
	9	4.9
	10	*
	11	*
	12	0
	13	8.2
	14	2.4
	15	3.5
	16	3.5
	17	5.7
	18	7.7
	19	1.0
	20	3.6
	21	3.2
	22	3.9
	23	3.3
	24	2.5
	25	2.5
	26	2.6
	27	*
	28	4.5
	29	4.5
	30	4.5
	31	4.5
	32	4.5
	33	4.0
	34	3.6
	35	*
	36	*
	37	*
	38	4.6
	39	*
	40	5.1
	41	5.0
	42	0
	43	4.9
	44	*
	45	7.4
	46	5.0
	47	8.6
	48	*
	49	4.3

Ref	Pin No	Voltage[v]
	50	0
	51	0
	52	2.7
IC502	1	0.9
	2	3.6
	3	1.6
	4	0
	5	2.9
	6	2.4
	7	6.9
	8	8.9
IC503	1	1.6
	2	12.9
	3	13.14
	4	14.6
	5	*
	6	13.0
	7	1.6
IC602	1	121.2
	2	127.7
	3	121.2
IC603	I	12.7
	G	0
	O	8.9
IC604	I	8.2
	G	5.0
	O	0
Q001	B	0.8
	C	0
	E	0
Q002	B	0
	C	5.0
	E	0
Q003	B	5.0
	C	0
	E	4.8
Q004	B	0
	C	4.9
	E	0
Q101	B	2.9
	C	8.8
	E	2.2
Q201	B	1.1
	C	0
	E	0
Q202	B	1.1
	C	0
	E	0
Q205	B	11.7
	C	0
	E	0
Q206	B	0
	C	0
	E	0
Q207	B	11.7
	C	0
	E	0
Q301	B	12.6
	C	12.7
	E	12.7
Q302	B	4.7
	C	8.1
	E	4.1

A (2/2) BOARD VOLTAGE LIST

Ref	Pin No	Voltage[v]	Ref	Pin No	Voltage[v]	Ref	Pin No	Voltage[v]
Q303	B	7.9	Q501	B	3.5	Q601	B	*
	C	3.2		C	0		C	*
	E	3.4		E	0		E	*
Q304	B	3.4	Q502	B	4.2	Q602	B	1.1
	C	0		C	2.4		C	1.2
	E	4.0		E	4.0		E	1.0
Q305	B	4.1	Q503	B	0	Q603	B	1.2
	C	0		C	3.6		C	1.0
	E	4.7		E	0		E	1.2
Q306	B	4.1	Q505	B	6.9	Q604	B	*
	C	0		C	15.7		C	0
	E	(0.4)[0]		E	0		E	133.9
Q307	B	4.3	Q507	B	*	Q605	B	0
	C	4.3		C	0.1		C	0
	E	8.6		E	12.8		E	0
Q308	B	(4.1)[3.5]	Q509	B	0.6	Q606	B	0
	C	0.4		C	0		C	0
	E	(4.7)[1.0]		E	0		E	0
Q313	B	0	Q511	B	0	Q607	B	0.7
	C	12.5		C	*		C	0
	E	0		E	*		E	0
Q315	B	0	Q600	B	0	Q608	B	0
	C	2.5		C	*		C	0
	E	0		E	0		E	0.7

B9 BOARD VOLTAGE LIST

Ref	Pin No	Voltage[v]	Ref	Pin No	Voltage[v]	Ref	Pin No	Voltage[v]
IC7203	1	4.5		26	*	Q7309	B	5.7
	2	4.5		27	*		C	8.8
	3	4.5		28	0		E	5.0
	4	4.5		29	3.8	Q7310	B	5.7
	5	4.5		30	3.8		C	8.8
	6	4.5		31	3.8		E	1.8
	7	4.5		32	3.8	Q7401	B	0
	8	4.5		33	4.5		C	0
	9	4.5		34	4.5		E	0
	10	4.5		35	4.5	Q7402	B	*
	11	4.5		36	4.5		C	0
	12	4.5		37	4.5		E	0
	13	4.5		38	4.5	Q7403	B	5.2
	14	4.5		39	4.5		C	0
	15	4.5		40	4.5		E	4.6
	16	4.5		41	4.5	Q7404	B	5.2
	17	4.5		42	8.9		C	0
	18	4.5	IC7204	1	5.0		E	4.5
	19	4.5		2	2.5			
	20	4.5		3	2.5			
	21	4.5		4	0			
	22	4.5		5	2.5			
	23	4.5		6	2.5			
	24	0		7	5.0			
	25	*		8	*			

H5 BOARD VOLTAGE LIST

Ref	Pin No	Voltage[v]
IC3901	1	4.8
	2	4.8
	3	0
Q3901	B	0.1
	C	4.9
	E	0.1
Q3902	B	*
	C	1.2
	E	1.3

C6 BOARD VOLTAGE LIST

Ref	Pin No	Voltage[v]	Ref	Pin No	Voltage[v]
IC1800	1	10.5	Q705	B	8.8
	2	10.8		C	148
	3	8.2		E	8.2
	4	(0)[8.3]	Q706	B	8.8
	5	0		C	149
	6	7.7		E	8.3
	7	7.7	Q707	B	(146.7)[171.1]
	8	2.4		C	5
	9	2.6		E	142.4
	10	12.2	Q710	B	2.5
J701	G2	(1.7)[295]		C	8.3
	H1	0.7		E	2.5
	KB	142.8	Q712	B	2.4
	KG	(143.3)[146]		C	8.3
	KR	145.5		E	2.4
Q701	B	(146.6)[*]	Q714	B	0
	C	198.9		C	0
	E	(146.2)[173]		E	0
Q702	B	148.1	Q1800	B	3.8
	C	198.9		C	0
	E	(148.5)[177]		E	4.5
Q703	B	149.1	Q714	B	*
	C	198.8		C	11.2
	E	(149.2)[180]		E	0
Q704	B	8.8			
	C	*			
	E	8.2			

VM1 BOARD VOLTAGE LIST

Ref	Pin No	Voltage[v]	Ref	Pin No	Voltage[v]
Q5901	B	2.6	Q5904	B	4.6
	C	8.7		C	5.0
	E	1.9		E	0
Q5902	B	134.9	Q5905	B	5.5
	C	(69.9)[73.9]		C	8.7
	E	134.9		E	5.1
Q5903	B	2.6	Q5906	B	0.2
	C	4.6		C	70
	E	1.9		E	72.3

D3 BOARD VOLTAGE LIST

Ref	Pin No	Voltage[v]	Ref	Pin No	Voltage[v]
IC2801	1	0.1	Q2801	B	1.6
	2	6.3		C	2.3
	3	0.1		E	0
	4	0	Q2802	B	3.3
	5	6.4		C	12.1
	6	0.1		E	0
	7	0.1	Q2803	B	11.5
	8	12.8		C	3.3
Q2800	B	1.6		E	12.1
	C	2.0	Q2804	B	2.3
	E	0		C	12.0
				E	0

5-5. WAVEFORMS

A BOARD WAVEFORMS

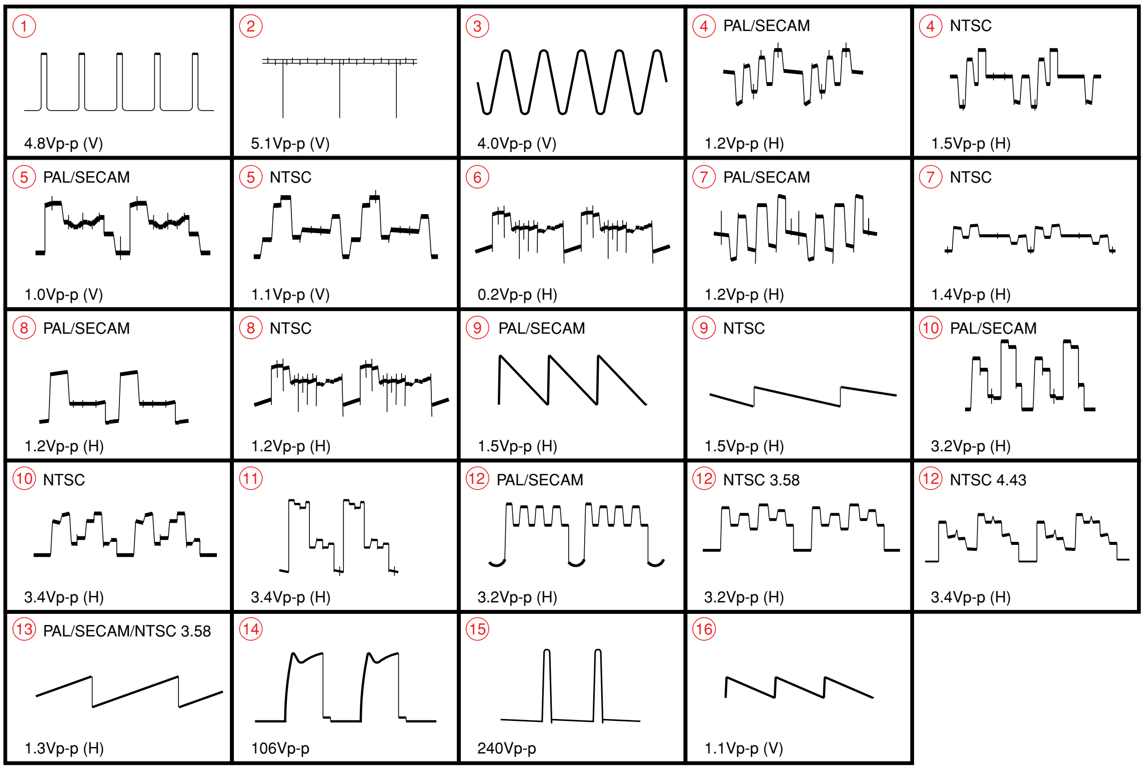

C6 BOARD WAVEFORMS

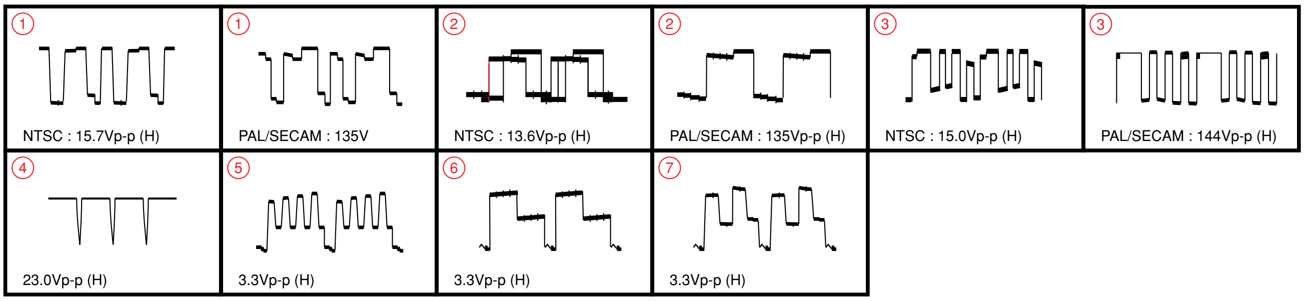

5-6. PRINTED WIRING BOARDS AND PARTS LOCATION

PRINTED WIRING BOARDS

B9 [CISPR, AC FUSE, A/V INPUT, DVD SWITCH, MONITOR OUT]

D3 [DQP, DYNAMIC FOCUS]

– B9 Board –

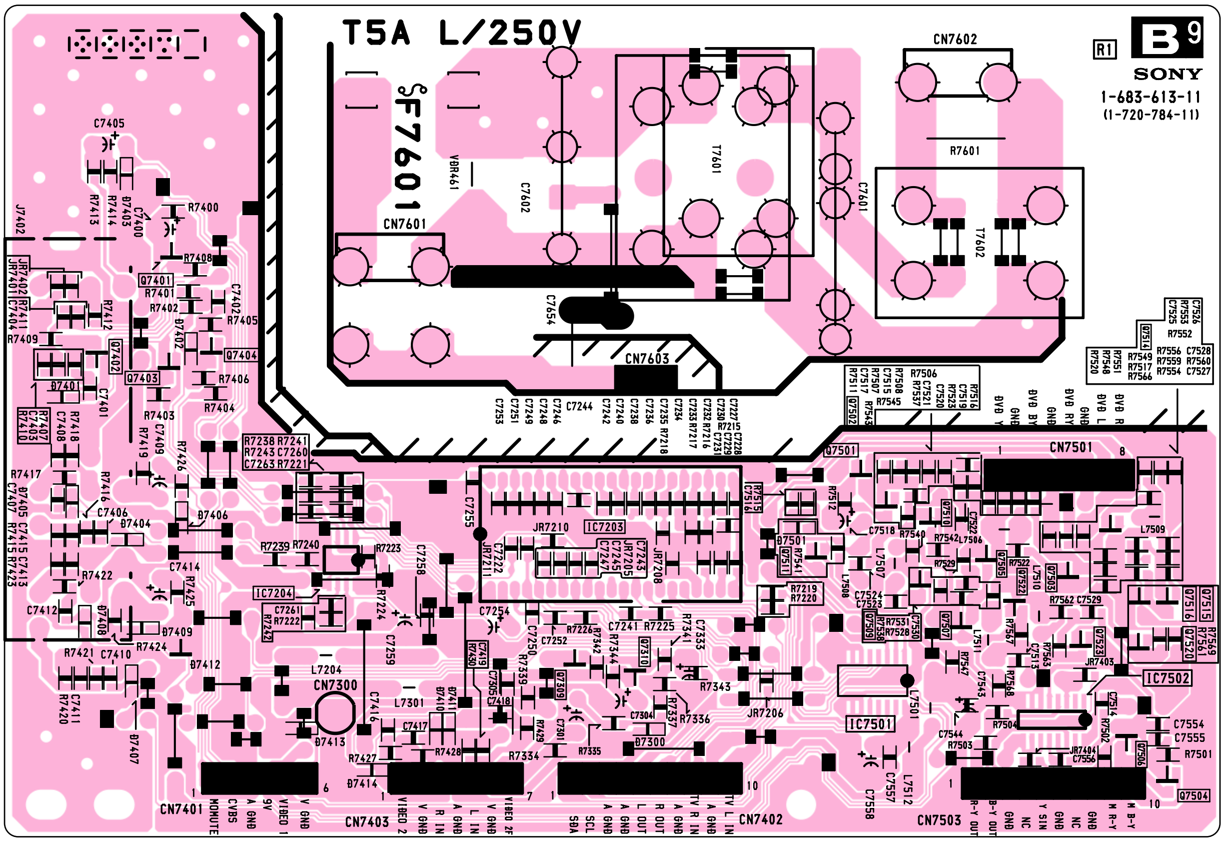

– D3 Board –

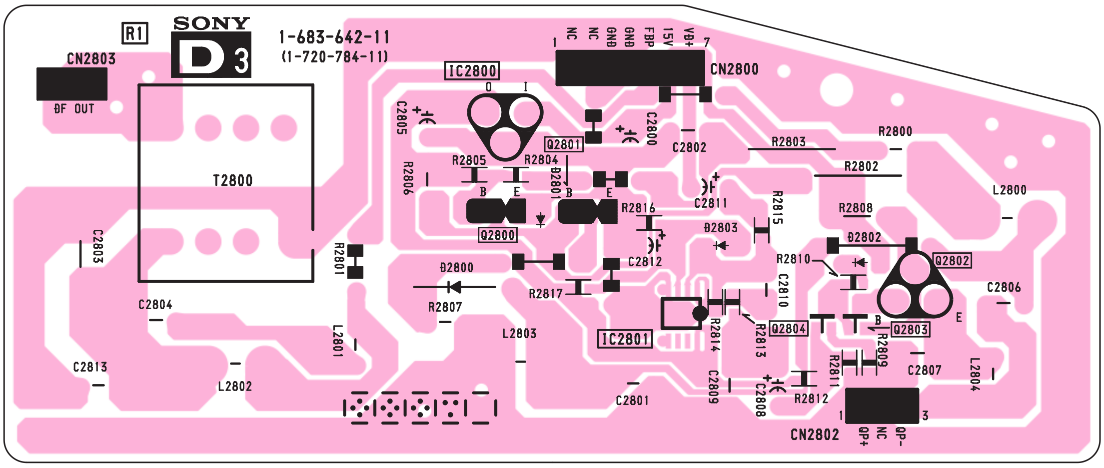

PRINTED WIRING BOARDS

NOTE:
The circuit indicated at left contains high voltage of over 1220 Vp-p. Please pay attention when inspecting or repairing it to prevent an electric shock.

A [SYSTEM CONTROLLER, Y/C JUNGLE, DEFLECTION, TUVIF, FRONT AMP, POWER SUPPLY]

– A Board –

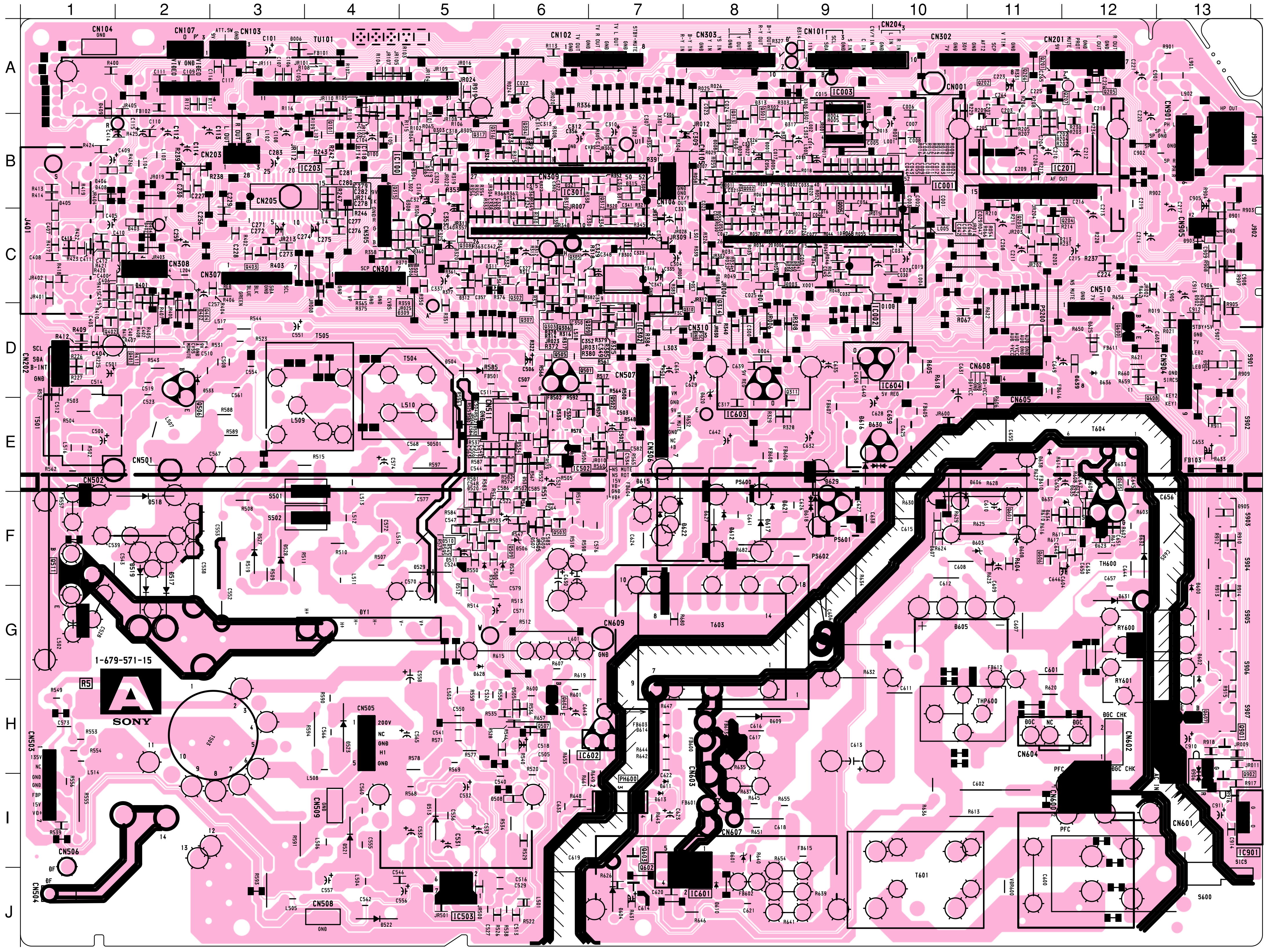

A BOARD

IC	
IC001	B-10
IC002	D-10
IC003	A-9
IC100	B-4
IC201	B-11
IC203	B-4
IC301	B-6
IC302	D-7
IC502	E-6
IC503	J-5
IC601	J-8
IC602	H-7

TRANSISTOR	
Q001	C-8
Q001	B-8
Q002	B-8
Q005	B-9
Q101	B-4
Q201	A-11
Q202	A-11
Q203	C-11
Q204	C-12
Q205	A-12
Q206	A-11
Q207	A-12
Q301	A-8
Q302	C-6
Q303	D-6
Q304	B-6
Q305	C-6
Q306	D-6
Q307	D-6
Q308	C-5
Q310	D-8
Q311	D-9
Q312	B-7
Q313	A-8
Q314	C-8
Q315	B-4
Q316	B-5
Q317	B-5
Q401	D-2
Q402	D-1
Q403	C-3
Q404	D-2
Q501	D-5
Q502	E-7
Q503	F-6
Q505	D-5
Q506	E-2
Q507	H-6
Q509	F-6
Q511	F-1
Q600	D-12
Q601	F-11
Q602	J-7
Q603	I-7
Q604	H-6
Q605	E-12
Q606	F-11
Q607	H-13
Q608	D-12
Q901	H-13
Q902	H-13

DIODE	
D001	B-8
D002	B-9
D003	C-9
D004	D-8
D005	B-8
D006	A-3
D007	B-8
D008	B-8
D009	B-8
D010	C-10
D011	C-8
D100	B-4
D203	C-11
D300	A-9
D301	A-9
D303	B-5
D304	B-5
D305	B-5
D306	C-5
D307	C-5
D308	B-5
D309	D-5
D311	C-5
D312	C-5
D313	A-8
D314	A-9
D315	B-7
D316	B-7
D317	B-9
D319	B-6
D320	C-5
D321	B-6
D322	B-6
D401	C-2
D402	D-2
D403	C-2
D404	C-2
D405	B-1
D406	B-1
D407	C-2
D408	B-1
D409	A-1
D504	D-5
D505	H-6
D506	F-6
D507	F-6
D508	I-6
D510	F-5
D511	F-5
D512	F-5
D513	I-5
D517	F-2
D518	F-2
D519	F-2
D520	E-5
D521	I-4
D522	J-4
D523	H-4
D525	F-5
D526	F-6
D527	F-3
D528	F-3
D529	F-5
D531	E-6
D532	E-5
D533	D-2
D534	E-6
D600	G-13
D601	I-8
D602	G-13
D603	F-11
D604	J-7
D605	G-10
D606	E-11
D607	F-10
D608	F-11
D609	H-8
D610	J-8
D611	J-7
D612	F-8
D613	I-7
D615	E-7
D616	E-9
D617	F-8
D618	F-9
D620	D-8
D621	F-9
D622	F-7
D623	F-12
D624	E-12
D625	D-12
D627	F-8
D628	G-5
D629	E-9
D630	E-9
D631	G-12
D632	F-12
D633	E-12
D634	F-11
D635	E-12
D636	D-12
D637	F-11
D638	E-11
D639	D-12
D901	C-13
D902	C-13
D903	C-13
D904	D-13
D905	F-13
D906	H-13

PRINTED WIRING BOARDS

C6 [RGB OUT, PICTURE ROTATION] **H5** [CONTROL PANEL]

VM1 [VELOCITY MODULATION]

– C6 Board –

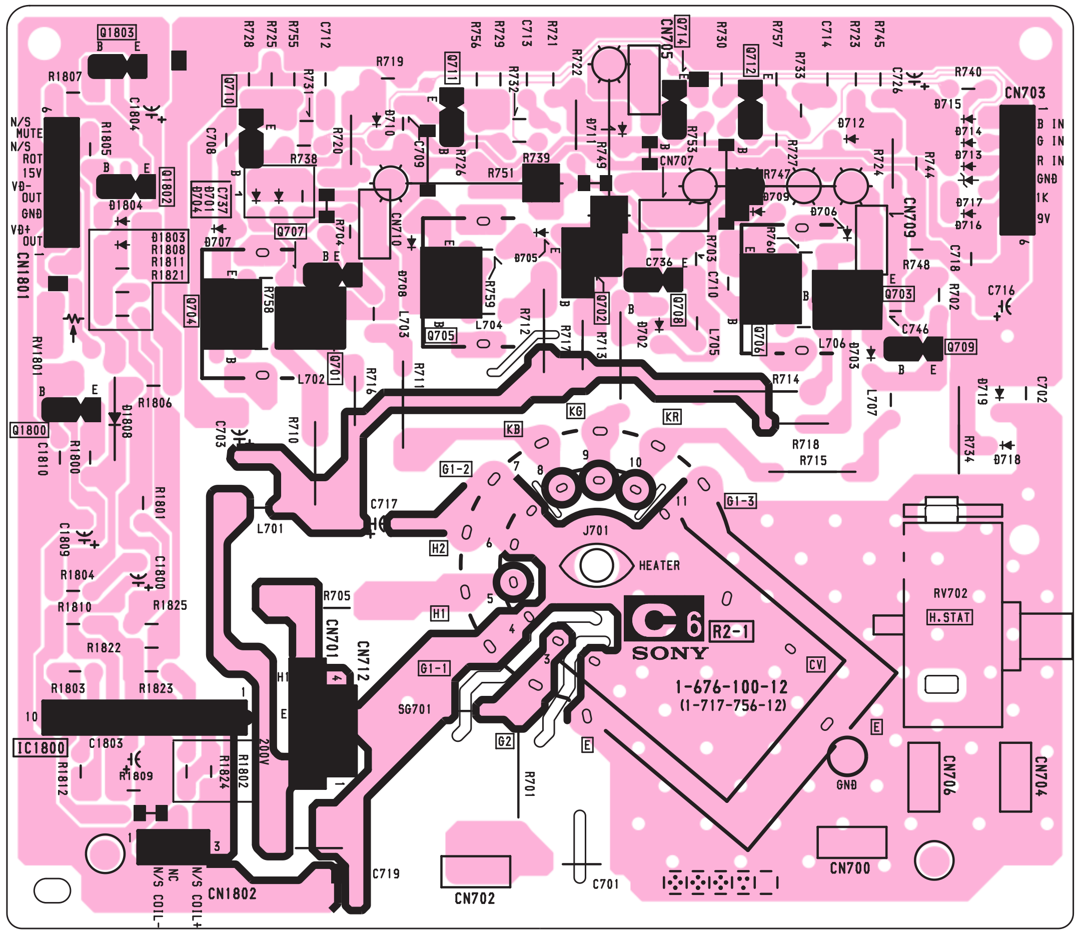

– VM1 Board –

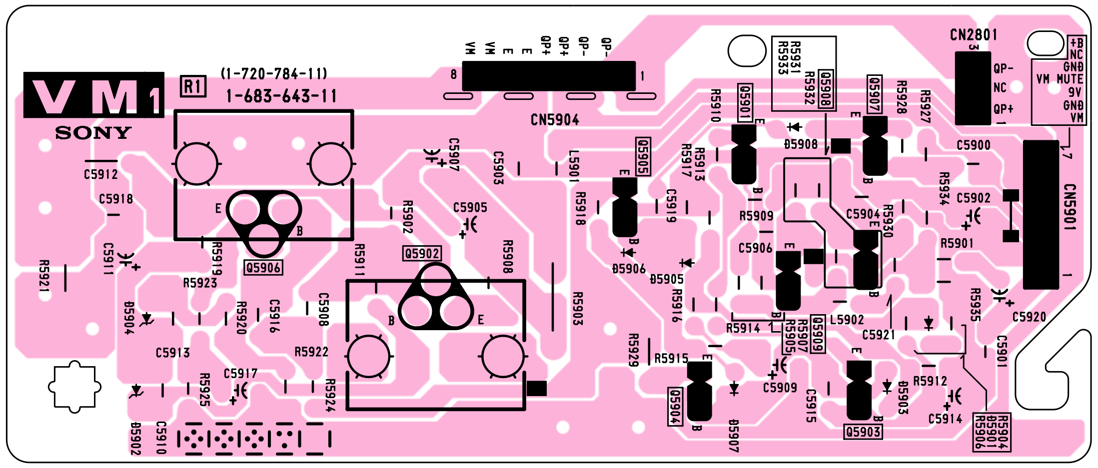

– H5 Board –

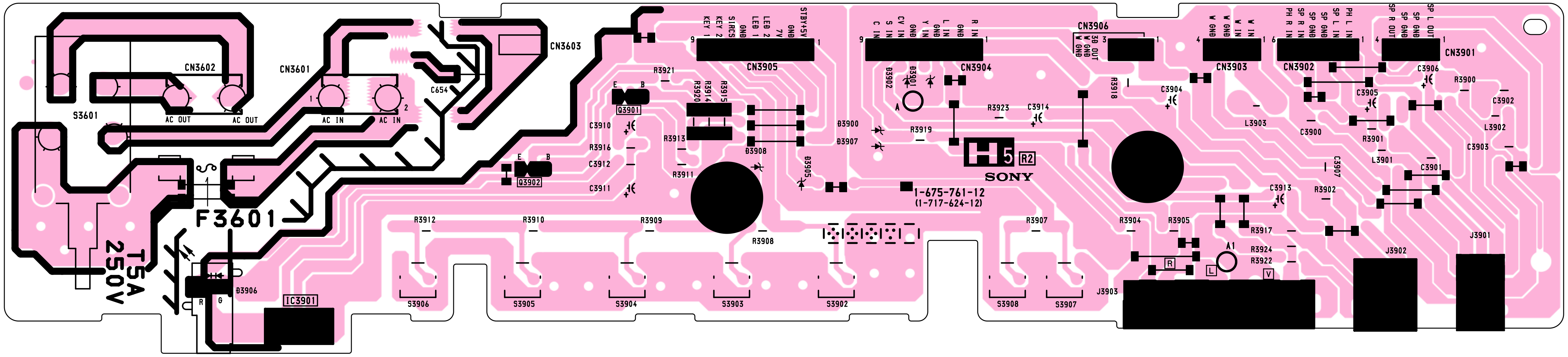

PRINTED WIRING BOARDS

J4 [DVD, 3D TERMINAL] **V1** [TELE TEXT]

– J4 Board –

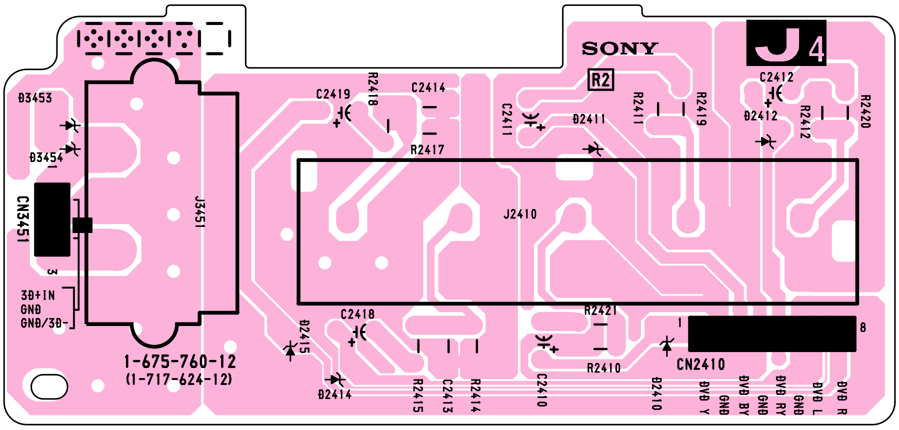

– V1 Board – (KV-XJ29M61 ONLY)

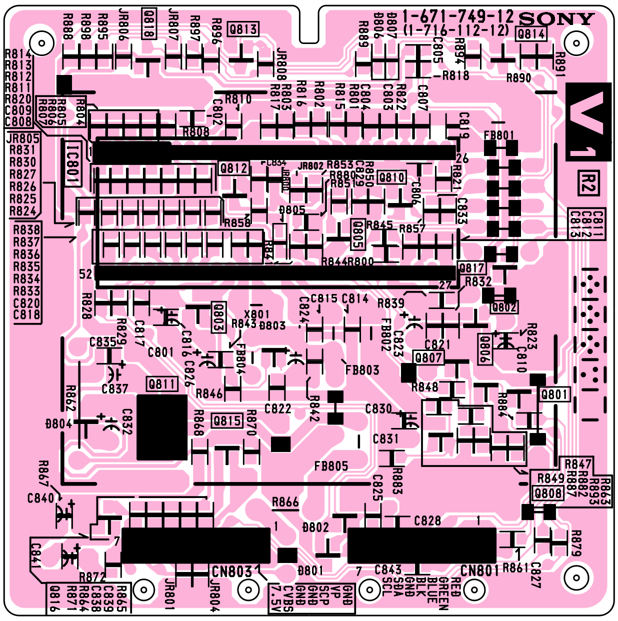

5-7. SEMICONDUCTORS

DIODE

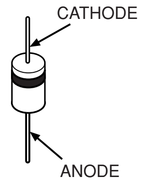		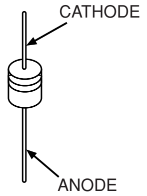	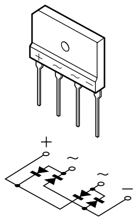	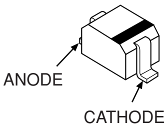	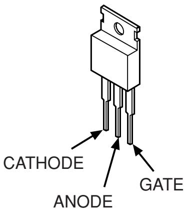
AK04V0 AU-01Z-V1 D2L20U EL1Z ERA22-08 ERC04-06SE GP08D HZS9-1NB2	NNCD9.1A-T1 RD33EB3T RGP02-17EL-6433 RS3FS RU4AM-T4 31DQ06-FC5	D1NS4 D1N20R RD6.8ES-B1 RD20ES-B2 RD30ESB2 RD39ES-B2 1SS119-25	D3SB60	DTZ10B MA111-7X RD5.1SB-T2 RD7.5SB1-T1 RD9.1S-B RD10S-B 1SS355TE-17	5P6M

				LED	TRANSISTOR
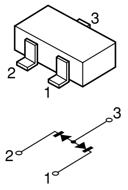	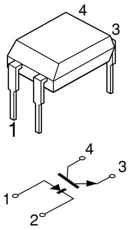	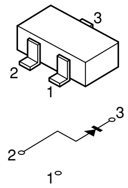	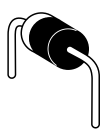	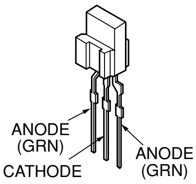	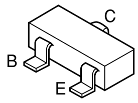
DA204K DAP202U 1SS302	ON3171-R	RD3.3M-B2 RD5.6M-B2	RN4Z	SPB-26MVWF	MSD601-RT1 UN2111 UN2211 UN2213 UN2216 2SA1162-G 2SC1623-L5L6 2SD2114K

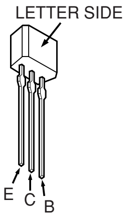	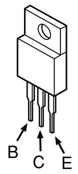	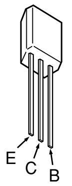	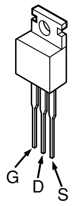	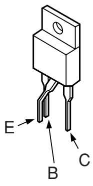	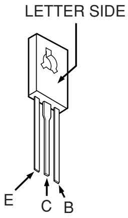
DTC144ESA 2SA1175-HFE 2SC2785-HFE	2SA1606-E 2SC4159-E 2SD2394-EF	2SC2458-YGR 2SC3576	IRF614	2SK2845-LB102	2SC2611 2SC2688-LK

				IC	
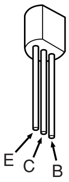	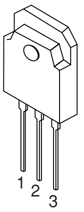	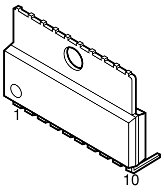	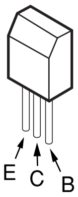	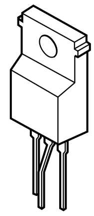	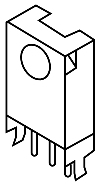
2SA1091-0 2SC2551-0	KIA7805API KIA7809API 2SD2578-CA	LA6510	2SC2958	SE-135N	SBX3081-21

IC

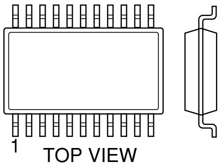 TOP VIEW Small outline L-leaded Pin 8~98	MARKING SIDE VIEW 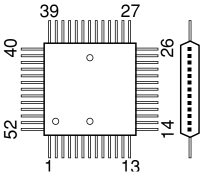 	 TOP VIEW Dual In-line Package Pin 6~98
LM358D (8PIN) MC145053BF MM1319AFBE (7PIN) NJM2903M (8PIN) UPC4558G2 (8PIN)	RU-1P	CXA2159S CXP86461-637S (64PIN) M24C08-BN6 (8PIN) SAA5261 TDA7429S (15PIN) TDA9183T

MARKING SIDE VIEW 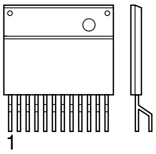 Zig-zag In -line Package Pin 6~99	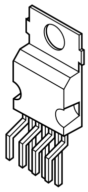	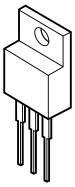	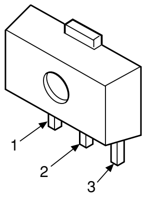 	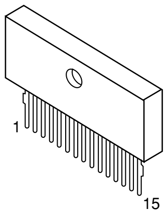
STR-F6456S	TDA8172	NJM78M09FA	S-80743AL-A7-S	TA8223K

SECTION 6
EXPLODED VIEWS

NOTE:
- Items with no part number and no description are not stocked because they are seldom required for routine service.
- The construction parts of an assembled part are indicated with a collation number in the remark column.
- Items marked " * " are not stocked since they are seldom required for routine service. Some delay should be anticipated when ordering these items.

The components identified by shading and mark ⚠ are critical for safety.
Replace only with part number specified.

6-1. SPEAKER BRACKET

■: 7-685-663-71 SCREW +BVTP 4 × 16

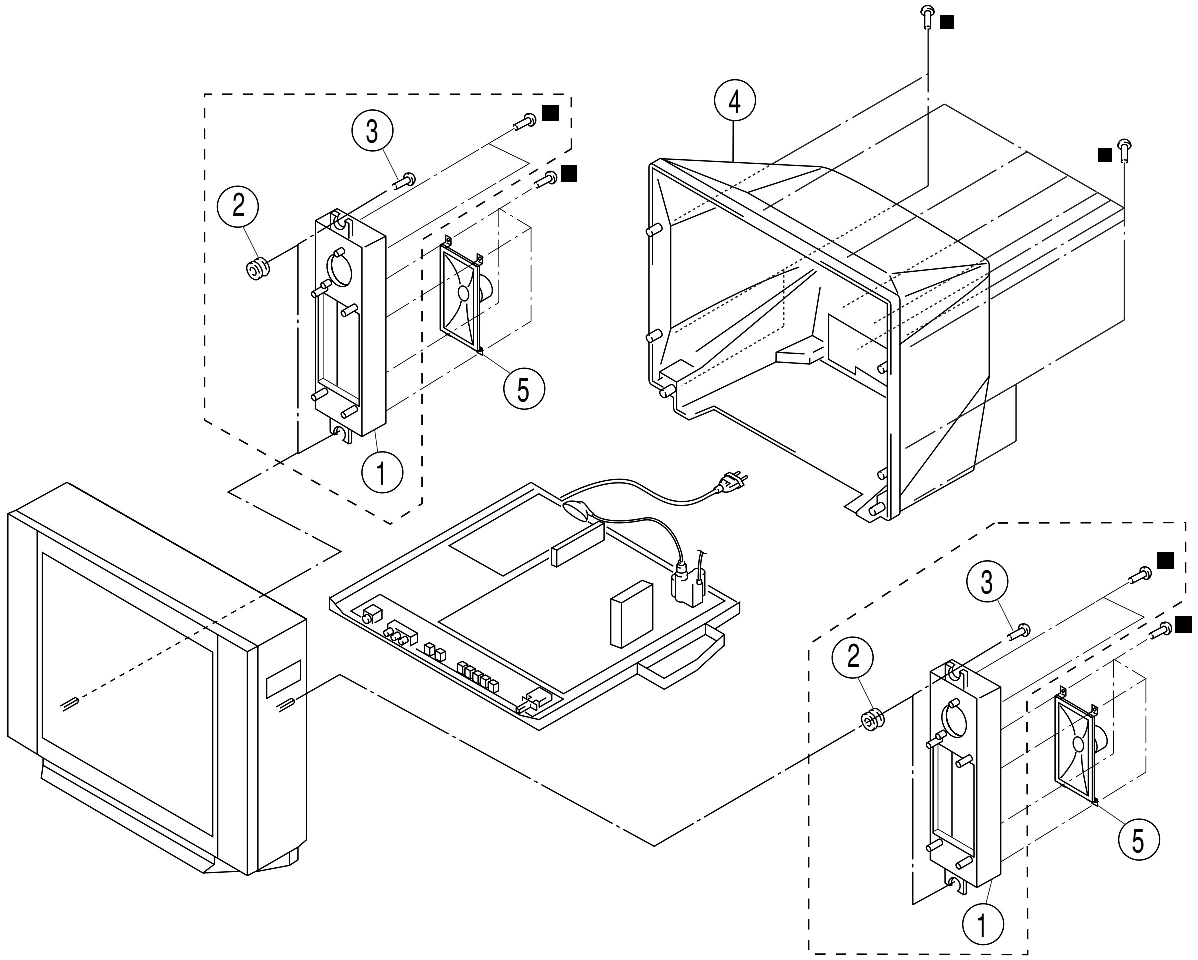

REF. NO.	PART NO.	DESCRIPTION	REMARK
1	* 4-070-757-01	BRACKET SPEAKER	REFER PAGE 68 NO 101
2	4-374-745-21	CUSHION A	REFER PAGE 68 NO 101
3	4-038-870-01	SCREW (4X16) W (+) P TAPPING (KV-XJ29M61 ONLY)	REFER PAGE 68 NO 101
4	4-065-506-11	COVER REAR	
5	1-529-563-11	SPEAKER (15 X 6.5 CM)	

6-2. CHASSIS

●: 7-685-648-79 SCREW BVTP 3 × 12
■: 7-685-663-71 SCREW BVTP 4 × 16

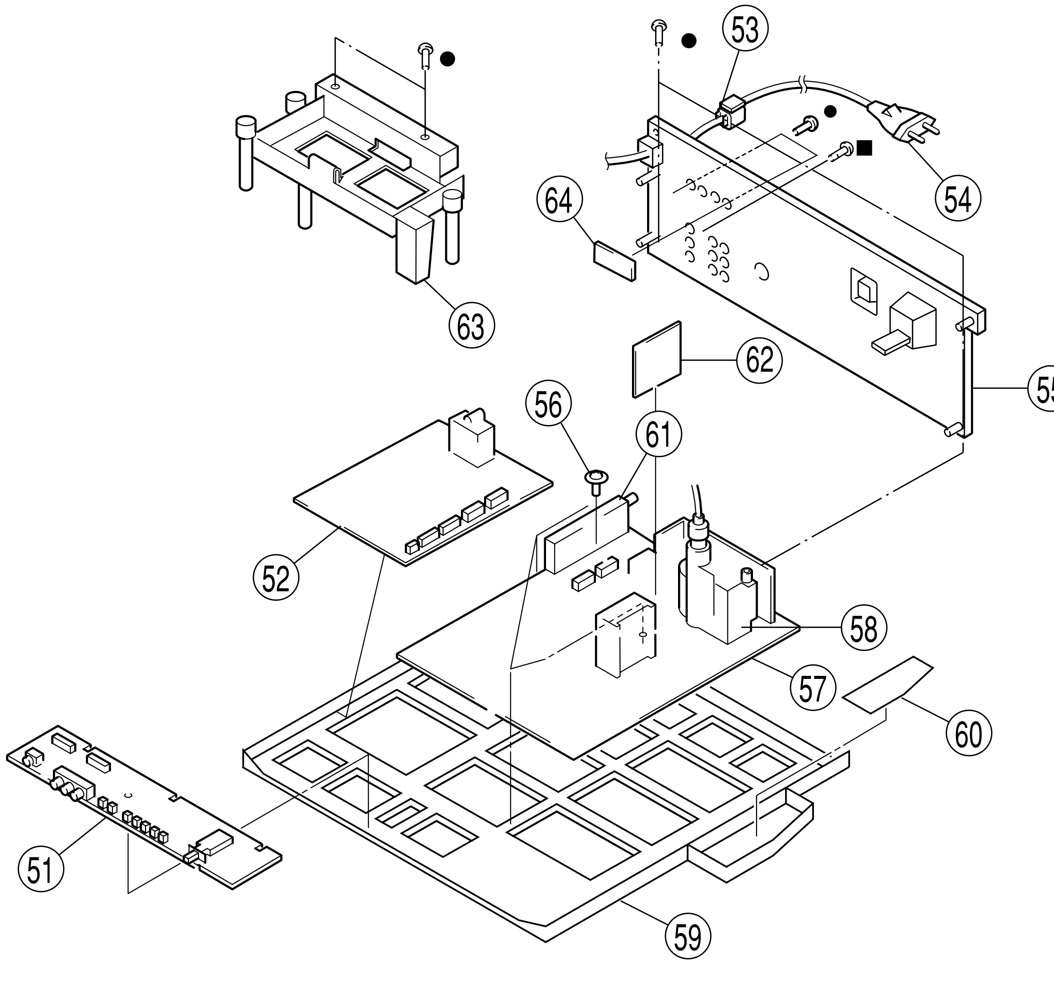

REF. NO.	PART NO.	DESCRIPTION	REMARK
51	* A-1377-085-A	H5 BOARD MOUNTED	
52	* A-1136-282-A	B9 BOARD COMPLETE	
53	4-022-115-00	HOLDER, AC CORD	
54	⚠ 1-823-480-11	CORD, POWER (WITH CONNECTOR)	
55	* 4-083-023-02	BRACKET, TERMINAL	
56	4-046-797-01	SCREW (3X12), (+)BVTAP	
57	* A-1299-665-A	A BOARD COMPLETE (KV-XJ29M50)	
	* A-1299-666-A	A BOARD COMPLETE (KV-XJ29M61)	
58	⚠ 1-453-284-11	TRANSFORMER ASSY, FLYBACK (NX-4009//M314)	
59	* 4-066-681-05	BRACKET, MAIN (SIX SCREWS (3X12), (+) BVTAP)	
60	* A-1400-167-A	D3 BOARD MOUNTED	
61	8-598-449-10	TUNER, FSS BTF-LG433 (KV-XJ29M50)	
	8-598-451-00	TUNER, FSS BTF-WG441 (KV-XJ29M61)	
62	* A-1347-164-A	V1 BOARD COMPLETE (KV-XJ29M61 only)	
63	4-070-963-01	HOLDER, PWB	
64	* A-1388-338-A	J4 BOARD MOUNTED	

6-3. PICTURE TUBE

●: 7-685-648-79 SCREW BVTP 3 × 12

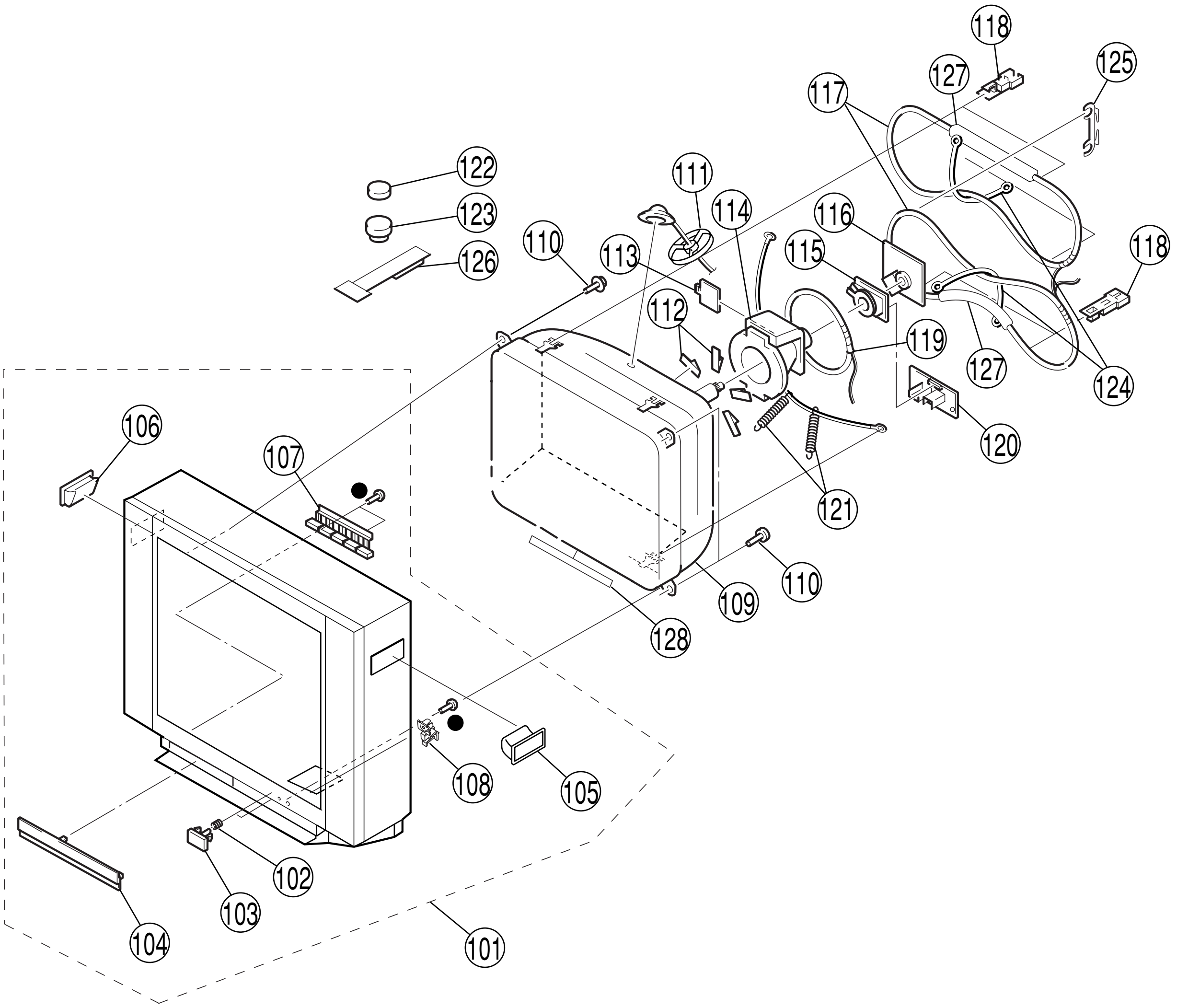

REF. NO.	PART NO.	DESCRIPTION	REMARK
101	X-4039-674-1	BEZNET ASSY (KV-XJ29M50)	1-2, 102 - 108
	X-4039-675-1	BEZNET ASSY (KV-XJ29M61)	1-3, 102 - 108
102	4-036-405-11	SPRING, COMPRESSION	
103	4-070-752-01	BUTTON, POWER	
104	4-070-754-61	DOOR, CONTROL (KV-XJ29M61)	
	4-070-754-31	DOOR, CONTROL (KV-XJ29M50)	
105	4-070-957-01	HANDLE (R)	
106	4-070-956-01	HANDLE (L)	
107	4-070-753-11	BUTTON, MULTI	
108	* 4-070-755-01	BAR OPTICAL	
109	⚠ 8-735-056-05	PICTURE TUBE (M68LNH070X)	
110	4-046-765-12	SCREW, TAPPING 7+CROWN WASHER	
111	* 3-704-372-11	HOLDER, HV CABLE	
112	4-072-365-02	SPACER, DY	
113	4-077-228-02	PIECE, TLH CONVENGENCE	
114	⚠ 8-451-494-31	DEFLECTION YOKE (Y29RSA-S)	
115	8-453-011-41	NA299-C	
116	* A-1332-152-A	C6 BOARD MOUNTED	
117	⚠ 1-419-294-11	COIL, DEGAUSING	
118	* 4-062-970-12	CLIP (29RSN), DGC	
119	1-452-896-11	COIL, NA ROTATION (RT200)	
120	* A-1400-168-A	VM1 BOARD MOUNTED	
121	4-369-318-61	SPRING, TENSION	
122	1-452-032-00	MAGNET,DISC	
123	1-452-094-00	CIRCULAR DISC MAGNET B	
124	4-079-376-01	BAND, DGC	
125	4-064-883-03	HOLDER, DGC	
126	X-4387-214-3	PERMALOY ASSY, CORRECTION	
127	4-063-935-21	CUSHION (50 X 550) DGC	
128	4-072-569-11	SHEET BLOTTING	

SECTION 7
ELECTRICAL PARTS LIST

A

NOTE:

The components identified by shading and mark ⚠ are critical for safety.
Replace only with part number specified.

When indicating parts by reference number, please include the board name.

- Items marked " * " are not stocked since they are seldom required for routine service. Some delay should be anticipated when ordering these items.
- All variable and adjustable resistors have characteristic curve B, unless otherwise noted.

- All resistors are in ohms
- F : nonflammable

CAPACITORS
- MF : μF, PF : μμF

COILS
- MMH : mH, UH : μH

REF NO.	PART NO.	DESCRIPTION	REMARK		
	* A-1299-665-A	A BOARD COMPLETE (KV-XJ29M50)			
	* A-1299-666-A	A BOARD COMPLETE (KV-XJ29M61)			
		*******************			
	* 4-374-846-01	COVER, CAPACITOR, CAP TYPE			
	4-382-854-11	SCREW (M3X10), P, SW (+)			
	4-382-854-21	SCREW (M3X14), P, SW (+)			
		<CAPACITOR>			
C004	1-162-960-11	CERAMIC CHIP	220PF	10.00%	50V
C005	1-162-960-11	CERAMIC CHIP	220PF	10.00%	50V
C006	1-164-004-11	CERAMIC CHIP	0.1UF	10.00%	25V
C007	1-126-947-11	ELECT	47UF	20.00%	16V
C013	1-163-021-91	CERAMIC CHIP	0.01UF	10.00%	50V
C014	1-126-947-11	ELECT	47UF	20.00%	25V
C015	1-162-964-11	CERAMIC CHIP	0.001UF	10.00%	50V
C016	1-163-243-11	CERAMIC CHIP	47PF	5.00%	50V
C017	1-162-925-11	CERAMIC CHIP	68PF	5.00%	50V
C019	1-126-947-11	ELECT	47UF	20.00%	25V
C022	1-162-915-11	CERAMIC CHIP	10PF	0.50PF	50V
C023	1-162-915-11	CERAMIC CHIP	10PF	0.50PF	50V
C024	1-162-915-11	CERAMIC CHIP	10PF	0.50PF	50V
C026	1-164-004-11	CERAMIC CHIP	0.1UF	10.00%	25V
C027	1-164-004-11	CERAMIC CHIP	0.1UF	10.00%	25V
C028	1-163-037-11	CERAMIC CHIP	0.022UF	10.00%	50V
C030	1-126-965-91	ELECT	22UF	20.00%	50V
C031	1-164-004-11	CERAMIC CHIP	0.1UF	10.00%	25V
C032	1-107-823-11	CERAMIC CHIP	0.47UF	10.00%	16V
C041	1-162-927-11	CERAMIC CHIP	100PF	5.00%	50V
C042	1-162-927-11	CERAMIC CHIP	100PF	5.00%	50V
C044	1-162-927-11	CERAMIC CHIP	100PF	5.00%	50V
C047	1-162-927-11	CERAMIC CHIP	100PF	5.00%	50V
C055	1-162-927-11	CERAMIC CHIP	100PF	5.00%	50V
C103	1-164-004-11	CERAMIC CHIP	0.1UF	10.00%	25V
C104	1-104-665-11	ELECT	100UF	20.00%	10V
C107	1-162-962-11	CERAMIC CHIP	470PF	10.00%	50V
C108	1-126-947-11	ELECT	47UF	20.00%	16V
C109	1-162-962-11	CERAMIC CHIP	470PF	10.00%	50V
C110	1-162-962-11	CERAMIC CHIP	470PF	10.00%	50V
C111	1-162-962-11	CERAMIC CHIP	470PF	10.00%	50V
C112	1-126-947-11	ELECT	47UF	20.00%	16V
C113	1-126-947-11	ELECT	47UF	20.00%	25V
C114	1-126-967-11	ELECT	47UF	20.00%	50V
C202	1-163-021-91	CERAMIC CHIP	0.01UF	10.00%	50V
C203	1-163-021-91	CERAMIC CHIP	0.01UF	10.00%	50V
C204	1-136-161-00	FILM	0.047UF	5.00%	50V
C205	1-164-182-11	CERAMIC CHIP	0.0033UF	10.00%	50V
C206	1-164-182-11	CERAMIC CHIP	0.0033UF	10.00%	50V
C207	1-136-161-00	FILM	0.047UF	5.00%	50V
C208	1-126-965-91	ELECT	22UF	20.00%	50V
C209	1-126-965-91	ELECT	22UF	20.00%	50V
C210	1-126-933-11	ELECT	100UF	20.00%	16V
C211	1-126-941-11	ELECT	470UF	20.00%	25V
C212	1-126-933-11	ELECT	100UF	20.00%	16V
C213	1-126-933-11	ELECT	100UF	20.00%	16V
C214	1-126-942-61	ELECT	1000UF	20.00%	25V
C215	1-126-942-61	ELECT	1000UF	20.00%	25V
C216	1-163-021-91	CERAMIC CHIP	0.01UF	10.00%	50V
C217	1-126-964-11	ELECT	10UF	20.00%	50V
C218	1-136-167-00	FILM	0.15UF	5.00%	50V
C219	1-136-167-00	FILM	0.15UF	5.00%	50V
C220	1-126-942-61	ELECT	1000UF	20.00%	25V
C221	1-126-964-11	ELECT	10UF	20.00%	50V
C223	1-126-965-91	ELECT	22UF	20.00%	50V
C224	1-163-133-00	CERAMIC CHIP	470PF	5.00%	50V
C225	1-109-982-11	CERAMIC CHIP	1UF	10.00%	10V
C226	1-109-982-11	CERAMIC CHIP	1UF	10.00%	10V
C264	1-164-505-11	CERAMIC CHIP	2.2UF		16V
C265	1-164-505-11	CERAMIC CHIP	2.2UF		16V
C301	1-126-935-11	ELECT	470UF	20.00%	16V
C302	1-162-962-11	CERAMIC CHIP	470PF	10.00%	50V
C303	1-126-964-11	ELECT	10UF	20.00%	50V
C304	1-126-967-11	ELECT	47UF	20.00%	50V
C305	1-164-004-11	CERAMIC CHIP	0.1UF	10.00%	25V
C306	1-162-918-11	CERAMIC CHIP	18PF	5.00%	50V
C307	1-162-918-11	CERAMIC CHIP	18PF	5.00%	50V
C308	1-163-259-91	CERAMIC CHIP	220PF	5.00%	50V
C309	1-137-378-11	MYLAR	0.22UF	5.00%	50V
C310	1-126-963-11	ELECT	4.7UF	20.00%	50V
C311	1-126-964-11	ELECT	10UF	20.00%	50V
C312	1-163-038-91	CERAMIC CHIP	0.1UF		25V
C313	1-163-038-91	CERAMIC CHIP	0.1UF		25V
C316	1-126-934-11	ELECT	220UF	20.00%	16V
C317	1-164-004-11	CERAMIC CHIP	0.1UF	10.00%	25V
C318	1-162-974-11	CERAMIC CHIP	0.01UF		50V
C319	1-162-974-11	CERAMIC CHIP	0.01UF		50V
C320	1-162-974-11	CERAMIC CHIP	0.01UF		50V
C322	1-162-962-11	CERAMIC CHIP	470PF	10.00%	50V
C324	1-162-968-11	CERAMIC CHIP	0.0047UF	10.00%	50V
C325	1-126-960-11	ELECT	1UF	20.00%	50V
C327	1-126-965-91	ELECT	22UF	20.00%	50V
C328	1-164-004-11	CERAMIC CHIP	0.1UF	10.00%	25V
C329	1-126-965-91	ELECT	22UF	20.00%	50V
C330	1-164-004-11	CERAMIC CHIP	0.1UF	10.00%	25V
C331	1-126-963-11	ELECT	4.7UF	20.00%	50V
C332	1-126-963-11	ELECT	4.7UF	20.00%	50V
C335	1-164-004-11	CERAMIC CHIP	0.1UF	10.00%	25V
C336	1-164-004-11	CERAMIC CHIP	0.1UF	10.00%	25V
C337	1-126-961-11	ELECT	2.2UF	20.00%	50V
C341	1-115-340-11	CERAMIC CHIP	0.22UF	10.00%	25V
C342	1-163-259-91	CERAMIC CHIP	220PF	5.00%	50V
C347	1-126-933-11	ELECT	100UF	20.00%	16V

The components identified by shading and mark ⚠ are critical for safety.
Replace only with part number specified.

A

REF NO.	PART NO.	DESCRIPTION			REMARK
C348	1-164-004-11	CERAMIC CHIP	0.1UF	10.00%	25V
C349	1-164-004-11	CERAMIC CHIP	0.1UF	10.00%	25V
C350	1-216-295-91	SHORT	0		
C351	1-126-964-11	ELECT	10UF	20.00%	50V
C352	1-164-004-11	CERAMIC CHIP	0.1UF	10.00%	25V
C353	1-126-960-11	ELECT	1UF	20.00%	50V
C356	1-126-960-11	ELECT	1UF	20.00%	50V
C357	1-164-004-11	CERAMIC CHIP	0.1UF	10.00%	25V
C502	1-163-145-00	CERAMIC CHIP	0.0015UF	5.00%	50V
C503	1-126-964-11	ELECT	10UF	20.00%	50V
C506	1-107-638-11	ELECT	33UF	20.00%	160V
C507	1-161-830-00	CERAMIC	0.0047UF		500V
C510	1-102-112-00	CERAMIC	330PF	10.00%	50V
C512	1-163-989-11	CERAMIC CHIP	0.033UF	10.00%	25V
C513	1-163-263-11	CERAMIC CHIP	330PF	5.00%	50V
C514	1-106-383-00	MYLAR	0.047UF	10.00%	200V
C517	1-162-967-11	CERAMIC CHIP	0.0033UF	10.00%	50V
C518	1-104-665-11	ELECT	100UF	20.00%	10V
C519	1-102-212-00	CERAMIC	820PF	10.00%	500V
C521	1-126-934-11	ELECT	220UF	20.00%	16V
C522	1-126-933-11	ELECT	100UF	20.00%	16V
C523	1-102-002-00	CERAMIC	680PF	10.00%	500V
C524	1-126-967-11	ELECT	47UF	20.00%	50V
C526	1-130-495-00	MYLAR	0.1UF	5.00%	50V
C527	1-102-820-00	CERAMIC	330PF	5.00%	50V
C528	1-162-116-00	CERAMIC	680PF	10.00%	2KV
C530	1-137-372-11	MYLAR	0.022UF	5.00%	50V
C531	1-107-903-11	ELECT	2.2UF	20.00%	50V
C532	1-126-941-11	ELECT	470UF	20.00%	25V
C533	1-126-941-11	ELECT	470UF	20.00%	25V
C534	1-164-004-11	CERAMIC CHIP	0.1UF	10.00%	25V
C536	1-130-495-00	MYLAR	0.1UF	5.00%	50V
C537	1-126-969-11	ELECT	220UF	20.00%	50V
C538	1-127-717-11	FILM	19000PF	3%	1.2KV
C539	1-129-723-00	FILM	0.056UF	5.00%	630V
C540	1-136-171-00	FILM	0.33UF	5.00%	50V
C546	1-165-319-11	CERAMIC CHIP	0.1UF		50V
C549	1-162-968-11	CERAMIC CHIP	0.0047UF	10.00%	50V
C550	1-106-220-00	MYLAR	0.1UF	10.00%	100V
C551	1-126-960-11	ELECT	1UF	20.00%	50V
C552	1-162-116-00	CERAMIC	680PF	10.00%	2KV
C553	1-162-116-00	CERAMIC	680PF	10.00%	2KV
C554	1-137-417-11	MYLAR	0.0047UF	10.00%	200V
C556	1-126-941-11	ELECT	470UF	20.00%	25V
C557	1-126-941-11	ELECT	470UF	20.00%	25V
C558	1-123-024-21	ELECT	33UF		160V
C560	1-102-228-00	CERAMIC	470PF	10.00%	500V
C561	1-129-898-00	FILM	0.0022UF	5.00%	630V
C562	1-102-228-00	CERAMIC	470PF	10.00%	500V
C564	1-163-038-91	CERAMIC CHIP	0.1UF		25V
C565	1-107-655-11	ELECT	47UF	20.00%	250V
C566	1-102-244-00	CERAMIC	220PF	10.00%	500V
C567	1-115-520-11	FILM	0.68UF	5.00%	250V
C568	1-102-228-00	CERAMIC	470PF	10.00%	500V
C570	1-115-522-11	FILM	1UF	5.00%	250V
C572	1-117-661-21	FILM	0.15UF	5.00%	250V
C573	1-106-387-00	MYLAR	0.068UF	10.00%	200V
C574	1-104-709-11	ELECT	4.7UF		160V
C576	1-130-495-00	MYLAR	0.1UF	5.00%	50V
C577	1-106-395-00	MYLAR	0.15UF	10.00%	200V
C582	1-164-004-11	CERAMIC CHIP	0.1UF	10.00%	25V
C584	1-162-927-11	CERAMIC CHIP	100PF	5.00%	50V

REF NO.	PART NO.	DESCRIPTION			REMARK
C586	1-162-927-11	CERAMIC CHIP	100PF	5.00%	50V
C600	⚠ 1-115-165-11	MYLAR	0.1UF	20.00%	250V
C602	⚠ 1-115-165-11	MYLAR	0.1UF	20.00%	250V
C603	1-126-947-11	ELECT	47UF	20.00%	25V
C604	1-162-964-11	CERAMIC CHIP	0.001UF	10.00%	50V
C605	⚠ 1-119-886-51	CERAMIC	470PF	10.00%	250V
C606	⚠ 1-119-886-51	CERAMIC	470PF	10.00%	250V
C607	1-161-830-00	CERAMIC	0.0047UF	99%	500V
C608	1-161-830-00	CERAMIC	0.0047UF	99%	500V
C609	1-126-968-11	ELECT	100UF	20.00%	50V
C610	1-126-964-11	ELECT	10UF	20.00%	50V
C611	1-161-830-00	CERAMIC	0.0047UF	99%	500V
C612	1-161-830-00	CERAMIC	0.0047UF	99%	500V
C613	1-125-906-11	ELECT	560UF	20.00%	450V
C614	1-126-964-11	ELECT	10UF	20.00%	50V
C615	⚠ 1-119-886-51	CERAMIC	470PF	10.00%	250V
C616	1-130-202-00	FILM	0.022UF	5.00%	400V
C617	1-107-792-11	CERAMIC	100PF	5.00%	1KV
C618	1-125-893-11	FILM	680PF	3.00%	1.5KV
C619	⚠ 1-119-886-51	CERAMIC	470PF	10.00%	250V
C620	1-163-133-00	CERAMIC CHIP	470PF	5.00%	50V
C621	1-102-114-00	CERAMIC	470PF	10.00%	50V
C622	1-102-074-00	CERAMIC	0.001UF	10.00%	50V
C623	1-104-665-11	ELECT	100UF	20.00%	25V
C624	1-125-772-91	CERAMIC	1500PF	10.00%	2KV
C625	1-102-002-00	CERAMIC	680PF	10.00%	500V
C626	1-102-002-00	CERAMIC	680PF	10.00%	500V
C628	1-126-942-61	ELECT	1000UF	20.00%	25V
C629	1-126-964-11	ELECT	10UF	20.00%	50V
C630	1-125-494-11	ELECT(BLOCK)	560UF	20.00%	160V
C632	1-128-339-11	ELECT	2200UF	20.00%	16V
C633	1-104-999-11	MYLAR	0.1UF	10.00%	200V
C634	1-126-933-11	ELECT	100UF	20.00%	16V
C635	1-104-665-11	ELECT	100UF	20.00%	10V
C636	1-104-760-11	CERAMIC CHIP	0.047UF	10.00%	50V
C641	1-102-002-00	CERAMIC	680PF	10.00%	500V
C642	1-126-943-11	ELECT	2200UF	20.00%	25V
C643	1-104-665-11	ELECT	100UF	20.00%	10V
C644	1-104-331-11	CERAMIC	0.0022UF	10.00%	1KV
C645	1-137-605-11	MYLAR	0.01UF	10.00%	250V
C646	1-107-679-91	ELECT	10UF	20.00%	450V
C647	1-163-275-11	CERAMIC CHIP	0.001UF	5.00%	50V
C649	1-126-940-11	ELECT	330UF	20.00%	25V
C650	1-163-275-11	CERAMIC CHIP	0.001UF	5.00%	50V
C651	1-163-133-00	CERAMIC CHIP	470PF	5.00%	50V
C652	1-126-965-91	ELECT	22UF	20.00%	50V
C653	1-126-947-11	ELECT	47UF	20.00%	25V
C655	⚠ 1-119-886-51	CERAMIC	470PF	10.00%	250V
C657	1-101-821-00	CERAMIC	0.0022UF		500V
C901	1-136-153-00	FILM	0.01UF	5.00%	50V
C902	1-136-153-00	FILM	0.01UF	5.00%	50V
C912	1-164-004-11	CERAMIC CHIP	0.1UF	10.00%	25V
C913	1-104-665-11	ELECT	100UF	20.00%	10V

<CONNECTOR>

REF NO.	PART NO.	DESCRIPTION
CN101	* 1-764-333-11	PLUG, CONNECTOR 10P
CN102	* 1-564-507-11	PLUG, CONNECTOR 4P
CN104	1-695-915-11	TAB (CONTACT)
CN106	* 1-564-506-11	PLUG, CONNECTOR 3P
CN202	* 1-508-847-00	PIN, CONNECTOR 4P

A

REF NO.	PART NO.	DESCRIPTION			REMARK
CN205	* 1-508-784-21	PIN, CONNECTOR (5MM PITCH) 1P			
CN301	* 1-774-813-11	CONNECTOR, BOARD TO BOARD 7P (KV-XJ29M61 ONLY)			
CN305	* 1-564-509-11	PLUG, CONNECTOR 6P			
CN306	* 1-564-510-11	PLUG, CONNECTOR 7P			
CN307	* 1-774-813-11	CONNECTOR, BOARD TO BOARD 7P (KV-XJ29M61 ONLY)			
CN501	* 1-508-784-21	PIN, CONNECTOR (5MM PITCH) 1P			
CN502	* 1-508-784-21	PIN, CONNECTOR (5MM PITCH) 1P			
CN503	* 1-564-510-11	PLUG, CONNECTOR 7P			
CN504	1-695-915-11	TAB (CONTACT)			
CN505	* 1-564-508-11	PLUG, CONNECTOR 5P			
CN507	* 1-564-509-11	PLUG, CONNECTOR 6P			
CN601	1-580-843-11	PIN, CONNECTOR (POWER)			
CN602	* 1-508-786-00	PIN, CONNECTOR (5MM PITCH) 2P			
CN603	* 1-508-784-21	PIN, CONNECTOR (5MM PITCH) 1P			
CN604	* 1-573-963-11	PIN, CONNECTOR (PC BOARD) 3P			
CN901	* 1-564-509-11	PLUG, CONNECTOR 6P			
CN904	* 1-564-512-11	PLUG, CONNECTOR 9P			
		<DIODE>			
D001	8-719-988-61	1SS355TE-17			
D005	8-719-988-61	1SS355TE-17			
D006	8-719-988-61	1SS355TE-17			
D100	8-719-404-50	MA111-TX (KV-XJ29M61 ONLY)			
D203	8-719-820-41	1SS302			
D300	1-216-295-91	SHORT	0		
D301	8-719-988-61	1SS355TE-17			
D306	8-719-988-61	1SS355TE-17			
D307	8-719-988-61	1SS355TE-17			
D308	8-719-988-61	1SS355TE-17			
D309	8-719-159-10	RD5.1SB-T2			
D311	8-719-988-61	1SS355TE-17			
D312	8-719-988-61	1SS355TE-17			
D313	8-719-988-61	1SS355TE-17			
D314	8-719-988-61	1SS355TE-17			
D315	8-719-988-61	1SS355TE-17			
D316	8-719-037-06	RD7.5SB1-T1			
D320	8-719-158-35	RD9.1S-B			
D321	8-719-158-35	RD9.1S-B			
D504	8-719-302-43	EL1Z			
D505	8-719-988-61	1SS355TE-17			
D506	8-719-911-19	1SS119-25			
D507	8-719-988-61	1SS355TE-17			
D508	8-719-988-61	1SS355TE-17			
D509	1-216-073-91	RES-CHIP	10K	5%	1/10W
D510	8-719-988-61	1SS355TE-17			
D511	8-719-988-61	1SS355TE-17			
D512	8-719-988-61	1SS355TE-17			
D513	8-719-908-03	GP08D			
D517	8-719-312-71	RS3FS			
D518	8-719-074-35	RU4AM-T4			
D519	8-719-312-71	RS3FS			
D521	8-719-302-43	EL1Z			
D522	8-719-028-45	D2L20U			
D523	8-719-302-43	EL1Z			
D527	8-719-908-03	GP08D			
D528	8-719-908-03	GP08D			
D532	8-719-988-61	1SS355TE-17			
D534	8-719-988-61	1SS355TE-17			
D600	8-719-911-19	1SS119-25			

REF NO.	PART NO.	DESCRIPTION	REMARK
D602	8-719-911-19	1SS119-25	
D603	8-719-150-92	RD33EB3T	
D604	8-719-028-72	RGP02-17EL-6433	
D605	8-719-510-22	D3SB60	
D606	8-719-108-18	5P-6M	
D607	8-719-988-61	1SS355TE-17	
D608	8-719-110-53	RD20ES-B2	
D609	8-719-311-31	RU-1P	
D610	8-719-043-76	AK04V0	
D611	8-719-046-74	AU-01Z-V1	
D613	8-719-046-74	AU-01Z-V1	
D614	8-719-046-74	AU-01Z-V1	
D615	8-719-074-35	RU4AM-T4	
D616	8-719-067-18	RN4Z	
D617	8-719-073-84	31DQ06-FC5	
D620	8-719-110-72	RD30ESB2	
D623	8-719-082-03	DIODE MM3Z15VT1	
D624	8-719-988-61	1SS355TE-17	
D625	8-719-158-39	RD10S-B	
D627	8-719-073-84	31DQ06-FC5	
D628	8-719-911-19	1SS119-25	
D631	8-719-068-00	ERC04-06SE	
D632	8-719-068-00	ERC04-06SE	
D633	8-719-948-45	ERA22-08	
D634	8-719-988-61	1SS355TE-17	
D635	8-719-988-61	1SS355TE-17	
D636	8-719-510-02	D1NS4	
D637	8-719-109-96	RD6.8ES-B1	
D638	8-719-510-48	D1N20R	
		<CONNECTOR>	
DY1	*1-580-798-11	CONNECTOR PIN (DY) 6P	
		<FERRITE BEAD>	
FB300	1-410-397-21	FERRITE	1.1UH
FB501	1-410-397-21	FERRITE	1.1UH
FB502	1-410-397-21	FERRITE	1.1UH
FB600	1-410-397-21	FERRITE	1.1UH
FB601	1-410-397-21	FERRITE	1.1UH
FB602	1-410-397-21	FERRITE	1.1UH
FB603	1-410-397-21	FERRITE	1.1UH
FB604	1-412-911-31	FERRITE	0UH
FB605	1-406-656-21	INDUCTOR	3.3UH
FB606	1-412-911-31	FERRITE	0UH
FB608	1-412-911-31	FERRITE	0UH
FB611	1-410-397-21	FERRITE	1.1UH
FB612	1-410-397-21	FERRITE	1.1UH
FB613	1-410-397-21	FERRITE	1.1UH
FB615	1-412-911-31	FERRITE	0UH
		<IC>	
IC001	8-752-928-96	IC CXP86461-637S	
IC002	8-759-371-21	MM1319AFBE	
IC003	8-759-672-78	M24C08-BN6(A)	
IC100	8-759-042-02	S-80743AL-A7-S (KV-XJ29M61 ONLY)	
IC201	8-759-336-30	TA8223K	
IC301	8-752-095-72	CXA2159S	
IC302	8-759-672-27	TDA9183T	
IC502	8-759-700-07	NJM2903M	

The components identified by shading and mark ⚠ are critical for safety. Replace only with part number specified.

A

REF NO.	PART NO.	DESCRIPTION		REMARK
IC503	8-759-980-58	TDA8172		
IC601	8-749-019-09	IC STR-F6456S		
IC602	8-749-920-61	SE-135N		
IC603	8-759-347-18	KIA7809PI		
IC604	8-759-646-52	KIA7805API		
		<CHIP CONDUCTOR>		
JR001	1-216-295-91	SHORT	0	
JR002	1-216-295-91	SHORT	0	
JR003	1-216-295-91	SHORT	0	
JR004	1-216-295-91	SHORT	0	
JR006	1-216-295-91	SHORT	0	
JR007	1-216-295-91	SHORT	0	
JR008	1-216-295-91	SHORT	0	
JR010	1-216-295-91	SHORT	0	
JR012	1-216-295-91	SHORT	0	
JR014	1-216-295-91	SHORT	0	
JR015	1-216-295-91	SHORT	0	
JR016	1-216-295-91	SHORT	0	
JR019	1-216-295-91	SHORT	0	
JR020	1-216-295-91	SHORT	0	
JR022	1-216-295-91	SHORT	0	
JR023	1-216-295-91	SHORT	0	
JR024	1-216-295-91	SHORT	0	
JR025	1-216-295-91	SHORT	0	
JR028	1-216-295-91	SHORT	0	
JR102	1-216-295-91	SHORT	0	
JR107	1-216-295-91	SHORT	0	(KV-XJ29M61 ONLY)
JR109	1-216-295-91	SHORT	0	(KV-XJ29M50 ONLY)
JR202	1-216-295-91	SHORT	0	
JR204	1-216-295-91	SHORT	0	
JR214	1-216-295-91	SHORT	0	
JR300	1-216-295-91	SHORT	0	
JR304	1-216-295-91	SHORT	0	
JR308	1-216-295-91	SHORT	0	
JR311	1-216-295-91	SHORT	0	
JR312	1-216-295-91	SHORT	0	
JR400	1-216-295-91	SHORT	0	
JR500	1-216-295-91	SHORT	0	
JR501	1-216-295-91	SHORT	0	
JR502	1-216-295-91	SHORT	0	
JR503	1-216-295-91	SHORT	0	
JR505	1-216-295-91	SHORT	0	
JR600	1-216-295-91	SHORT	0	
		<COIL>		
L002	1-414-856-11	INDUCTOR	10UH	
L003	1-414-180-11	INDUCTOR	3.3UH	
L005	1-414-233-22	FERRITE	0UH	
L101	1-414-856-11	INDUCTOR	10UH	
L102	1-414-856-11	INDUCTOR	10UH	
L103	1-414-856-11	INDUCTOR	10UH	
L104	1-414-856-11	INDUCTOR	10UH	
L105	1-414-856-11	INDUCTOR	10UH	
L301	1-414-189-31	INDUCTOR	100UH	
L302	1-414-185-41	INDUCTOR	22UH	
L303	1-414-189-31	INDUCTOR	100UH	
L304	1-414-189-31	INDUCTOR	100UH	
L501	1-412-525-31	INDUCTOR	10UH	

REF NO.	PART NO.	DESCRIPTION		REMARK
L502	1-422-613-11	COIL, AIR CORE		
L503	1-412-525-31	INDUCTOR	10UH	
L504	1-412-525-31	INDUCTOR	10UH	
L507	1-459-111-00	INDUCTOR	10MH	
L511	1-406-977-71	INDUCTOR	0UH	
L513	1-412-551-31	INDUCTOR	1.5MH	
L515	1-459-104-00	COIL, WITH CORE		
L518	1-414-187-11	INDUCTOR	47UH	
L601	1-412-527-11	INDUCTOR	15UH	
L901	1-408-603-31	INDUCTOR	10UH	
L902	1-408-603-31	INDUCTOR	10UH	
L905	1-414-856-11	INDUCTOR	10UH	
		<PHOTO COUPLER>		
PH600 ⚠	8-749-924-35	ON3171-R		
		<IC LINK>		
PS200	1-532-675-21	LINK, IC 1.5A/150V		
		<TRANSISTOR>		
Q002	8-729-010-25	MSD601-RT1		
Q101	8-729-010-25	MSD601-RT1		
Q201	8-729-424-67	UN2216		
Q202	8-729-424-67	UN2216		
Q205	8-729-421-19	UN2213		
Q206	8-729-421-19	UN2213		
Q207	8-729-421-19	UN2213		
Q301	8-729-216-22	2SA1162-G		
Q302	8-729-010-25	MSD601-RT1		
Q303	8-729-216-22	2SA1162-G		
Q305	8-729-216-22	2SA1162-G		
Q306	8-729-010-25	MSD601-RT1		
Q307	8-729-010-25	MSD601-RT1		
Q308	8-729-216-22	2SA1162-G		
Q312	8-729-216-22	2SA1162-G		
Q313	8-729-010-25	MSD601-RT1		
Q314	8-729-216-22	2SA1162-G		
Q315	8-729-421-19	UN2213		
Q501	8-729-216-22	2SA1162-G		
Q502	8-729-216-22	2SA1162-G		
Q503	8-729-010-25	MSD601-RT1		
Q505	8-729-931-45	IRF614		
Q506	8-729-119-80	2SC2688-LK		
Q507	8-729-216-22	2SA1162-G		
Q509	8-729-010-25	MSD601-RT1		
Q511	8-729-048-07	2SD2578-CA		
Q600	8-729-119-78	2SC2785-HFE		
Q601	8-729-023-22	2SD2114K		
Q602	8-729-010-25	MSD601-RT1		
Q603	8-729-424-08	UN2111		
Q604	8-729-200-17	2SA1091-O		
Q605	8-729-044-30	2SK2845-LB102		
Q606	8-729-010-25	MSD601-RT1		
Q607	8-729-823-22	2SC3576		
Q608	8-729-010-25	MSD601-RT1		

A

REF NO.	PART NO.	DESCRIPTION		REMARK	
		<RESISTOR>			
R001	1-414-233-22	FERRITE	0UH		
R002	1-216-025-11	RES-CHIP	100	5%	1/10W
R003	1-216-073-91	RES-CHIP	10K	5%	1/10W
R004	1-216-025-11	RES-CHIP	100	5%	1/10W
R005	1-216-025-11	RES-CHIP	100	5%	1/10W
R008	1-216-065-91	RES-CHIP	4.7K	5%	1/10W
R010	1-216-065-91	RES-CHIP	4.7K	5%	1/10W
R011	1-216-065-91	RES-CHIP	4.7K	5%	1/10W
R012	1-216-065-91	RES-CHIP	4.7K	5%	1/10W
R013	1-216-065-91	RES-CHIP	4.7K	5%	1/10W
R014	1-216-025-11	RES-CHIP	100	5%	1/10W
R015	1-216-025-11	RES-CHIP	100	5%	1/10W
R017	1-216-049-11	RES-CHIP	1K	5%	1/10W
R018	1-216-033-00	RES-CHIP	220	5%	1/10W
R019	1-216-073-91	RES-CHIP	10K	5%	1/10W
R020	1-216-045-00	RES-CHIP	680	5%	1/10W
R021	1-216-073-91	RES-CHIP	10K	5%	1/10W
R022	1-216-025-11	RES-CHIP	100	5%	1/10W
R024	1-216-063-91	RES-CHIP	3.9K	5%	1/10W
R025	1-216-063-91	RES-CHIP	3.9K	5%	1/10W
R026	1-216-063-91	RES-CHIP	3.9K	5%	1/10W
R027	1-216-073-91	RES-CHIP	10K	5%	1/10W
R028	1-216-073-91	RES-CHIP	10K	5%	1/10W
		(KV-XJ29M61 ONLY)			
R029	1-216-049-11	RES-CHIP	1K	5%	1/10W
R031	1-216-049-11	RES-CHIP	1K	5%	1/10W
R034	1-216-049-11	RES-CHIP	1K	5%	1/10W
R035	1-216-025-11	RES-CHIP	100	5%	1/10W
R036	1-216-025-11	RES-CHIP	100	5%	1/10W
R037	1-216-025-11	RES-CHIP	100	5%	1/10W
R040	1-216-025-11	RES-CHIP	100	5%	1/10W
R041	1-216-025-11	RES-CHIP	100	5%	1/10W
R042	1-216-295-91	SHORT	0		
R043	1-216-049-11	RES-CHIP	1K	5%	1/10W
R044	1-216-025-11	RES-CHIP	100	5%	1/10W
R045	1-414-233-22	FERRITE	0UH		
R046	1-216-049-11	RES-CHIP	1K	5%	1/10W
R047	1-414-233-22	FERRITE	0UH		
R048	1-216-073-91	RES-CHIP	10K	5%	1/10W
R050	1-216-073-91	RES-CHIP	10K	5%	1/10W
R053	1-216-049-11	RES-CHIP	1K	5%	1/10W
R058	1-216-295-91	SHORT	0		
R059	1-216-295-91	SHORT	0		
R060	1-216-295-91	SHORT	0		
R061	1-216-033-00	RES-CHIP	220	5%	1/10W
R062	1-216-041-00	RES-CHIP	470	5%	1/10W
R063	1-216-041-00	RES-CHIP	470	5%	1/10W
R064	1-216-041-00	RES-CHIP	470	5%	1/10W
R065	1-216-041-00	RES-CHIP	470	5%	1/10W
R066	1-216-049-11	RES-CHIP	1K	5%	1/10W
R067	1-216-049-11	RES-CHIP	1K	5%	1/10W
R068	1-216-041-00	RES-CHIP	470	5%	1/10W
R101	1-216-025-11	RES-CHIP	100	5%	1/10W
		(KV-XJ29M61 ONLY)			
R102	1-216-025-11	RES-CHIP	100	5%	1/10W
		(KV-XJ29M61 ONLY)			
R105	1-216-295-91	SHORT	0		
R109	1-216-041-00	RES-CHIP	470	5%	1/10W
R111	1-216-025-11	RES-CHIP	100	5%	1/10W
R112	1-216-025-11	RES-CHIP	100	5%	1/10W
R113	1-216-047-91	RES-CHIP	820	5%	1/10W

REF NO.	PART NO.	DESCRIPTION		REMARK	
R202	1-216-053-00	RES-CHIP	1.5K	5%	1/10W
R203	1-216-057-00	RES-CHIP	2.2K	5%	1/10W
R204	1-216-065-91	RES-CHIP	4.7K	5%	1/10W
R205	1-216-065-91	RES-CHIP	4.7K	5%	1/10W
R206	1-216-057-00	RES-CHIP	2.2K	5%	1/10W
R207	1-216-053-00	RES-CHIP	1.5K	5%	1/10W
R208	1-216-069-00	RES-CHIP	6.8K	5%	1/10W
R209	1-216-069-00	RES-CHIP	6.8K	5%	1/10W
R210	1-216-031-00	RES-CHIP	180	5%	1/10W
R212	1-216-031-00	RES-CHIP	180	5%	1/10W
R225	1-216-033-00	RES-CHIP	220	5%	1/10W
R226	1-216-033-00	RES-CHIP	220	5%	1/10W
R227	1-216-033-00	RES-CHIP	220	5%	1/10W
R228	1-249-389-11	CARBON	4.7	5%	1/4W
R229	1-216-073-91	RES-CHIP	10K	5%	1/10W
R230	1-216-073-91	RES-CHIP	10K	5%	1/10W
R231	1-216-295-91	SHORT	0		
R234	1-249-389-11	CARBON	4.7	5%	1/4W
R237	1-216-308-00	RES-CHIP	4.7	5%	1/10W
R301	1-216-073-91	RES-CHIP	10K	5%	1/10W
R302	1-216-295-91	SHORT	0		
R303	1-216-049-11	RES-CHIP	1K	5%	1/10W
R304	1-216-073-91	RES-CHIP	10K	5%	1/10W
R305	1-216-051-00	RES-CHIP	1.2K	5%	1/10W
R308	1-216-025-11	RES-CHIP	100	5%	1/10W
R309	1-216-025-11	RES-CHIP	100	5%	1/10W
R310	1-216-025-11	RES-CHIP	100	5%	1/10W
R311	1-216-041-00	RES-CHIP	470	5%	1/10W
R312	1-216-039-00	RES-CHIP	390	5%	1/10W
R313	1-216-037-00	RES-CHIP	330	5%	1/10W
R314	1-216-083-00	RES-CHIP	27K	5%	1/10W
R316	1-216-037-00	RES-CHIP	330	5%	1/10W
R317	1-216-091-00	RES-CHIP	56K	5%	1/10W
R318	1-216-039-00	RES-CHIP	390	5%	1/10W
R319	1-216-025-11	RES-CHIP	100	5%	1/10W
R320	1-216-065-91	RES-CHIP	4.7K	5%	1/10W
R321	1-216-073-91	RES-CHIP	10K	5%	1/10W
R322	1-216-033-00	RES-CHIP	220	5%	1/10W
R325	1-216-041-00	RES-CHIP	470	5%	1/10W
R326	1-216-295-91	SHORT	0		
R331	1-216-295-91	SHORT	0		
R332	1-216-033-00	RES-CHIP	220	5%	1/10W
R335	1-216-045-00	RES-CHIP	680	5%	1/10W
R338	1-216-037-00	RES-CHIP	330	5%	1/10W
R340	1-216-025-11	RES-CHIP	100	5%	1/10W
R345	1-216-081-00	RES-CHIP	22K	5%	1/10W
R348	1-208-806-11	METAL CHIP	10K	0.5%	1/10W
R349	1-216-073-91	RES-CHIP	10K	5%	1/10W
R350	1-216-061-91	RES-CHIP	3.3K	5%	1/10W
R351	1-216-053-00	RES-CHIP	1.5K	5%	1/10W
R354	1-216-057-00	RES-CHIP	2.2K	5%	1/10W
R355	1-216-057-00	RES-CHIP	2.2K	5%	1/10W
R356	1-216-057-00	RES-CHIP	2.2K	5%	1/10W
R357	1-216-079-00	RES-CHIP	18K	5%	1/10W
R358	1-216-049-11	RES-CHIP	1K	5%	1/10W
R359	1-216-033-00	RES-CHIP	220	5%	1/10W
R360	1-216-033-00	RES-CHIP	220	5%	1/10W
R361	1-216-073-91	RES-CHIP	10K	5%	1/10W
R362	1-216-075-00	RES-CHIP	12K	5%	1/10W
R363	1-216-079-00	RES-CHIP	18K	5%	1/10W
R364	1-216-295-91	SHORT	0		
R365	1-216-033-00	RES-CHIP	220	5%	1/10W

The components identified by shading and mark ⚠ are critical for safety.
Replace only with part number specified.

A

REF NO.	PART NO.	DESCRIPTION		REMARK	
R366	1-216-073-91	RES-CHIP	10K	5%	1/10W
R367	1-216-073-91	RES-CHIP	10K	5%	1/10W
R368	1-216-073-91	RES-CHIP	10K	5%	1/10W
R370	1-216-033-00	RES-CHIP	220	5%	1/10W
R371	1-216-083-00	RES-CHIP	27K	5%	1/10W
R372	1-216-091-00	RES-CHIP	56K	5%	1/10W
R375	1-216-025-11	RES-CHIP	100	5%	1/10W
		(KV-XJ29M61 ONLY)			
R376	1-216-081-00	RES-CHIP	22K	5%	1/10W
R377	1-216-121-11	RES-CHIP	1M	5%	1/10W
R378	1-216-041-00	RES-CHIP	470	5%	1/10W
R379	1-218-179-11	RES-CHIP	10M	5%	1/10W
R380	1-216-041-00	RES-CHIP	470	5%	1/10W
R383	1-216-049-11	RES-CHIP	1K	5%	1/10W
R384	1-216-295-91	SHORT	0		
R385	1-216-033-00	RES-CHIP	220	5%	1/10W
R391	1-216-049-11	RES-CHIP	1K	5%	1/10W
R500	1-249-417-11	CARBON	1K	5%	1/4W
R501	1-216-049-11	RES-CHIP	1K	5%	1/10W
R505	1-216-699-91	METAL CHIP	100K	0.5%	1/10W
R506	1-216-081-00	RES-CHIP	22K	5%	1/10W
R507	1-249-389-11	CARBON	4.7	5%	1/4W
R508	1-216-471-11	METAL OXIDE	27	5%	3W
R509	1-216-473-11	METAL OXIDE	56	5%	3W
R510	1-216-449-11	METAL OXIDE	56	5%	2W
R511	1-215-908-00	METAL OXIDE	33	5%	3W
R515	1-215-911-11	METAL OXIDE	100	5%	3W
R517	1-208-798-11	METAL CHIP	4.7K	0.5%	1/10W
R518	1-247-807-31	CARBON	100	5%	1/4W
R519	1-215-913-11	METAL OXIDE	220	5%	3W
R520	1-215-445-00	METAL	10K	1%	1/4W
R522	1-208-806-11	METAL CHIP	10K	0.5%	1/10W
R523	1-249-411-11	CARBON	330	5%	1/4W
R525	1-208-846-11	METAL CHIP	470K	0.5%	1/10W
R526	1-208-804-11	METAL CHIP	8.2K	0.5%	1/10W
R527	1-216-001-00	RES-CHIP	10	5%	1/10W
R528	1-208-814-91	METAL CHIP	22K	0.5%	1/10W
R529	1-216-635-11	METAL CHIP	220	0.5%	1/10W
R531	1-247-843-11	CARBON	3.3K	5%	1/4W
R533	1-249-417-11	CARBON	1K	5%	1/4W
R534	1-216-364-11	METAL OXIDE	0.39	5%	2W
R535	1-216-067-00	RES-CHIP	5.6K	5%	1/10W
R536	1-216-067-00	RES-CHIP	5.6K	5%	1/10W
R537	1-208-804-11	METAL CHIP	8.2K	0.5%	1/10W
R539	1-216-049-11	RES-CHIP	1K	5%	1/10W
R540	1-216-065-91	RES-CHIP	4.7K	5%	1/10W
R541	1-216-065-91	RES-CHIP	4.7K	5%	1/10W
R542	1-216-073-91	RES-CHIP	10K	5%	1/10W
R543	1-216-437-00	METAL OXIDE	5.6K	5%	1W
R544	1-215-917-11	METAL OXIDE	1K	5%	3W
R545	1-216-077-91	RES-CHIP	15K	5%	1/10W
R546	1-216-077-91	RES-CHIP	15K	5%	1/10W
R547	1-216-085-91	RES-CHIP	33K	5%	1/10W
R548	1-208-796-11	METAL CHIP	3.9K	0.5%	1/10W
R549	1-215-452-00	METAL	20K	1%	1/4W
R550	1-216-097-11	RES-CHIP	100K	5%	1/10W
R551	1-249-441-11	CARBON	100K	5%	1/4W
R552	1-216-057-00	RES-CHIP	2.2K	5%	1/10W
R553	1-215-453-00	METAL	22K	1%	1/4W
R554	1-215-453-00	METAL	22K	1%	1/4W
R556	1-215-437-00	METAL	4.7K	1%	1/4W

REF NO.	PART NO.	DESCRIPTION		REMARK	
R558	1-247-843-11	CARBON	3.3K	5%	1/4W
R559	1-249-429-11	CARBON	10K	5%	1/4W
R560	1-216-073-91	RES-CHIP	10K	5%	1/10W
R561	1-216-049-11	RES-CHIP	1K	5%	1/10W
R562	1-249-401-11	CARBON	47	5%	1/4W
R564	1-208-820-11	METAL CHIP	39K	0.5%	1/10W
R565	1-216-073-91	RES-CHIP	10K	5%	1/10W
R567	1-216-105-91	RES-CHIP	220K	5%	1/10W
R568	1-249-383-11	CARBON	1.5	5%	1/4W
R570	1-216-069-00	RES-CHIP	6.8K	5%	1/10W
R571	1-215-443-00	METAL	8.2K	1%	1/4W
R573	1-216-083-00	RES-CHIP	27K	5%	1/10W
R575	1-208-796-11	METAL CHIP	3.9K	0.5%	1/10W
R577	1-215-913-11	METAL OXIDE	220	5%	3W
R578	1-216-369-00	METAL OXIDE	1	5%	2W
R579	1-216-295-91	SHORT	0		
R580	1-208-830-11	METAL CHIP	100K	0.5%	1/10W
R581	1-208-790-11	METAL CHIP	2.2K	0.5%	1/10W
R582	1-208-842-11	METAL CHIP	330K	0.5%	1/10W
R584	1-218-760-11	METAL CHIP	220K	0.5%	1/10W
R587	1-208-822-11	METAL CHIP	47K	0.5%	1/10W
R588	1-215-888-00	METAL OXIDE	220	5%	2W
R589	1-215-888-00	METAL OXIDE	220	5%	2W
R590	1-215-465-00	METAL	68K	1%	1/4W
R591	1-260-288-11	CARBON	0.47	5%	1/2W
R592	1-208-820-11	METAL CHIP	39K	0.5%	1/10W
R593	1-260-288-11	CARBON	0.47	5%	1/2W
R594	1-260-288-11	CARBON	0.47	5%	1/2W
R595	1-216-073-91	RES-CHIP	10K	5%	1/10W
R596	1-215-916-00	METAL OXIDE	680	5%	3W
R597	1-247-750-11	CARBON	680	5%	1/2W
R598	1-249-438-11	CARBON	56K	5%	1/4W
R599	1-249-389-11	CARBON	4.7	5%	1/4W
R600	1-249-438-11	CARBON	56K	5%	1/4W
R601	1-249-420-11	CARBON	1.8K	5%	1/4W
R602	1-249-389-11	CARBON	4.7	5%	1/4W
R603	1-215-485-00	METAL	470K	1%	1/4W
R604	1-216-097-11	RES-CHIP	100K	5%	1/10W
R607	1-249-425-11	CARBON	4.7K	5%	1/4W
R608	1-240-205-91	CARBON	22M	5%	1/2W
R609	1-216-057-00	RES-CHIP	2.2K	5%	1/10W
R610	1-216-073-91	RES-CHIP	10K	5%	1/10W
R611	1-216-089-91	RES-CHIP	47K	5%	1/10W
R612	1-216-045-00	RES-CHIP	680	5%	1/10W
R614	1-216-041-00	RES-CHIP	470	5%	1/10W
R615	1-216-369-00	METAL OXIDE	1	5%	2W
R616	1-260-302-51	CARBON	6.8	5%	1/2W
R617	1-247-791-91	CARBON	22	5%	1/4W
R619	1-260-128-11	CARBON	270K	5%	1/2W
R620	1-129-720-00	FILM	0.033UF	5.00%	630V
R621	1-215-864-00	METAL OXIDE	150	5%	1W
R623	1-216-095-00	RES-CHIP	82K	5%	1/10W
R624	1-216-089-91	RES-CHIP	47K	5%	1/10W
R626	1-216-049-11	RES-CHIP	1K	5%	1/10W
R627	1-240-251-11	CMT-MELF	6.8	5%	10W
R629	1-247-747-11	CARBON	470	5%	1/2W
R630	1-249-429-11	CARBON	10K	5%	1/4W
R631	1-216-089-91	RES-CHIP	47K	5%	1/10W
R632	1-220-886-11	FUSIBLE	0.1	10%	1W
R634	⚠ 1-240-917-91	METAL	8.2M	5%	1W

The components identified by shading and mark ⚠ are critical for safety.
Replace only with part number specified.

A B9

REF NO.	PART NO.	DESCRIPTION		REMARK	
R635	1-216-492-21	METAL OXIDE	82K	5%	3W
R636	1-215-924-00	METAL OXIDE	15K	5%	3W
R637	1-216-492-21	METAL OXIDE	82K	5%	3W
R639	1-216-361-21	METAL OXIDE	0.22	5%	2W
R640	1-249-415-11	CARBON	680	5%	1/4W
R641	1-216-361-21	METAL OXIDE	0.22	5%	2W
R642	1-249-419-11	CARBON	1.5K	5%	1/4W
R643	1-247-843-11	CARBON	3.3K	5%	1/4W
R644	1-249-419-11	CARBON	1.5K	5%	1/4W
R646	1-215-924-00	METAL OXIDE	15K	5%	3W
R647	1-249-387-11	CARBON	3.3	5%	1/4W
R648	1-216-057-00	RES-CHIP	2.2K	5%	1/10W
R649	1-249-417-11	CARBON	1K	5%	1/4W
R650	1-215-882-00	METAL OXIDE	22	5%	2W
R652	1-215-900-11	METAL OXIDE	22K	5%	2W
R653	1-215-873-00	METAL OXIDE	4.7K	5%	1W
R656	1-249-417-11	CARBON	1K	5%	1/4W
R657	1-260-127-11	CARBON	220K	5%	1/2W
R659	1-216-049-11	RES-CHIP	1K	5%	1/10W
R660	1-216-073-91	RES-CHIP	10K	5%	1/10W
R661	1-215-873-00	METAL OXIDE	4.7K	5%	1W
R682	1-249-377-11	CARBON	0.47	5%	1/4W
R901	1-249-411-11	CARBON	330	5%	1/4W
R902	1-249-411-11	CARBON	330	5%	1/4W
R909	1-216-065-91	RES-CHIP	4.7K	5%	1/10W
R910	1-216-065-91	RES-CHIP	4.7K	5%	1/10W
		<RELAY>			
RY600 ⚠	1-755-299-11	RELAY, AC POWER			
RY601 ⚠	1-755-299-11	RELAY, AC POWER			
		<SWITCH>			
S501	1-572-707-11	SWITCH, LEVER			
S502	1-572-707-11	SWITCH, LEVER			
		<TRANSFORMER>			
T501	1-437-195-11	TRANSFORMER, HORIZONTAL DRIVE			
T503 ⚠	1-453-284-11	TRANSFORMER ASSY FLYBACK (NX-4009//M314)			
T504	1-431-693-11	TRANSFORMER, HORIZONTAL LINEAR			
T505	1-426-981-11	TRANSFORMER, FERRITE (PMT)			
T601	1-424-505-11	TRANSFORMER, LINE FILTER			
T603 ⚠	1-435-147-11	TRANSFORMER, CONVERTER (SRT)			
T604 ⚠	1-431-852-11	TRANSFORMER, CONVERTER (SRT)			
		<THERMISTOR>			
TH600	1-803-586-11	THERMISTOR, NTC			
		<THERMISTOR>			
THP600	1-803-540-11	THERMISTOR			
		<TUNER>			
TU101	8-598-449-10	TUNER, FSS BTF-LG433 (KV-XJ29M50)			
TU101	8-598-451-00	TUNER, FSS BTF-WG441 (KV-XJ29M61)			

REF NO.	PART NO.	DESCRIPTION		REMARK	
		<VARISTOR>			
VDR600	1-803-830-31	VARISTOR (ERZV14D621)			
		<CRYSTAL>			
X001	1-579-125-11	VIBRATOR, CERAMIC			
X301	1-781-134-21	VIBRATOR, CRYSTAL			
X302	1-781-132-21	VIBRATOR, CRYSTAL			

****

*	A-1136-282-A	B9 BOARD COMPLETE ********************			
	1-533-223-11	CLIP, FUSE			
		<CAPACITOR>			
C7227	1-163-037-11	CERAMIC CHIP	0.022UF	10.00%	50V
C7228	1-163-024-00	CERAMIC CHIP	0.018UF	10.00%	50V
C7229	1-163-018-00	CERAMIC CHIP	0.0056UF	10.00%	50V
C7230	1-163-024-00	CERAMIC CHIP	0.018UF	10.00%	50V
C7231	1-163-018-00	CERAMIC CHIP	0.0056UF	10.00%	50V
C7232	1-163-037-11	CERAMIC CHIP	0.022UF	10.00%	50V
C7233	1-164-004-11	CERAMIC CHIP	0.1UF	10.00%	25V
C7234	1-164-004-11	CERAMIC CHIP	0.1UF	10.00%	25V
C7235	1-164-004-11	CERAMIC CHIP	0.1UF	10.00%	25V
C7236	1-164-004-11	CERAMIC CHIP	0.1UF	10.00%	25V
C7238	1-164-505-11	CERAMIC CHIP	2.2UF		16V
C7240	1-164-505-11	CERAMIC CHIP	2.2UF		16V
C7241	1-164-346-11	CERAMIC CHIP	1UF		16V
C7242	1-164-505-11	CERAMIC CHIP	2.2UF		16V
C7243	1-164-346-11	CERAMIC CHIP	1UF		16V
C7244	1-164-700-11	CERAMIC CHIP	0.68UF		16V
C7245	1-164-346-11	CERAMIC CHIP	1UF		16V
C7246	1-163-018-00	CERAMIC CHIP	0.0056UF	10.00%	50V
C7247	1-164-346-11	CERAMIC CHIP	1UF		16V
C7248	1-163-010-11	CERAMIC CHIP	0.0012UF	10.00%	50V
C7249	1-164-004-11	CERAMIC CHIP	0.1UF	10.00%	25V
C7250	1-164-346-11	CERAMIC CHIP	1UF		16V
C7251	1-163-017-00	CERAMIC CHIP	0.0047UF	10.00%	50V
C7252	1-164-346-11	CERAMIC CHIP	1UF		16V
C7253	1-163-037-11	CERAMIC CHIP	0.022UF	10.00%	50V
C7254	1-126-965-91	ELECT	22UF	20.00%	50V
C7255	1-163-037-11	CERAMIC CHIP	0.022UF	10.00%	50V
C7258	1-164-004-11	CERAMIC CHIP	0.1UF	10.00%	25V
C7259	1-126-933-11	ELECT	100UF	20.00%	16V
C7260	1-163-251-11	CERAMIC CHIP	100PF	5.00%	50V
C7261	1-163-251-11	CERAMIC CHIP	100PF	5.00%	50V
C7263	1-164-004-11	CERAMIC CHIP	0.1UF	10.00%	25V
C7301	1-126-933-11	ELECT	100UF	20.00%	16V
C7304	1-126-967-11	ELECT	47UF	20.00%	50V
C7305	1-164-004-11	CERAMIC CHIP	0.1UF	10.00%	25V
C7333	1-126-964-11	ELECT	10UF	20.00%	50V
C7401	1-164-346-11	CERAMIC CHIP	1UF		16V
C7402	1-164-346-11	CERAMIC CHIP	1UF		16V
C7403	1-163-005-91	CERAMIC CHIP	470PF	10.00%	50V
C7404	1-163-005-91	CERAMIC CHIP	470PF	10.00%	50V
C7405	1-126-935-11	ELECT	470UF	20.00%	16V
C7406	1-164-346-11	CERAMIC CHIP	1UF		16V
C7407	1-164-346-11	CERAMIC CHIP	1UF		16V

The components identified by shading and mark ⚠ are critical for safety.
Replace only with part number specified.

B9

REF NO.	PART NO.	DESCRIPTION		REMARK	
C7408	1-163-133-00	CERAMIC CHIP	470PF	5.00%	50V
C7409	1-126-933-11	ELECT	100UF	20.00%	16V
C7410	1-164-346-11	CERAMIC CHIP	1UF		16V
C7411	1-163-133-00	CERAMIC CHIP	470PF	5.00%	50V
C7412	1-164-346-11	CERAMIC CHIP	1UF		16V
C7413	1-163-133-00	CERAMIC CHIP	470PF	5.00%	50V
C7414	1-126-963-11	ELECT	4.7UF	20.00%	50V
C7415	1-163-133-00	CERAMIC CHIP	470PF	5.00%	50V
C7416	1-164-346-11	CERAMIC CHIP	1UF		16V
C7417	1-163-133-00	CERAMIC CHIP	470PF	5.00%	50V
C7418	1-164-346-11	CERAMIC CHIP	1UF		16V
C7419	1-163-133-00	CERAMIC CHIP	470PF	5.00%	50V
C7513	1-216-295-91	SHORT	0		
C7514	1-216-295-91	SHORT	0		
C7515	1-163-243-11	CERAMIC CHIP	47PF	5.00%	50V
C7517	1-164-005-11	CERAMIC CHIP	0.47UF		25V
C7518	1-126-963-11	ELECT	4.7UF	20.00%	50V
C7519	1-163-249-11	CERAMIC CHIP	82PF	5.00%	50V
C7520	1-163-249-11	CERAMIC CHIP	82PF	5.00%	50V
C7522	1-164-005-11	CERAMIC CHIP	0.47UF		25V
C7523	1-163-255-11	CERAMIC CHIP	150PF	5.00%	50V
C7524	1-163-247-91	CERAMIC CHIP	68PF	5.00%	50V
C7525	1-163-249-11	CERAMIC CHIP	82PF	5.00%	50V
C7526	1-163-249-11	CERAMIC CHIP	82PF	5.00%	50V
C7528	1-164-005-11	CERAMIC CHIP	0.47UF		25V
C7529	1-163-255-11	CERAMIC CHIP	150PF	5.00%	50V
C7530	1-163-247-91	CERAMIC CHIP	68PF	5.00%	50V
C7543	1-126-933-11	ELECT	100UF	20.00%	16V
C7544	1-165-319-11	CERAMIC CHIP	0.1UF		50V
C7554	1-165-319-11	CERAMIC CHIP	0.1UF		50V
C7557	1-165-319-11	CERAMIC CHIP	0.1UF		50V
C7558	1-126-947-11	ELECT	47UF	20.00%	16V
C7601	⚠ 1-104-708-51	MYLAR	0.47UF	20.00%	250V
C7602	⚠ 1-109-835-51	MYLAR	0.68UF	20.00%	250V
C7654	⚠ 1-117-703-51	CERAMIC	0.0047UF	99%	250V
		<CONNECTOR>			
CN7401	* 1-564-509-11	PLUG, CONNECTOR 6P			
CN7402	* 1-764-333-11	PLUG, CONNECTOR 10P			
CN7403	* 1-564-510-11	PLUG, CONNECTOR 7P			
CN7501	* 1-564-511-11	PLUG, CONNECTOR 8P			
CN7503	* 1-764-333-11	PLUG, CONNECTOR 10P			
CN7601	1-580-843-11	PIN, CONNECTOR (POWER)			
CN7602	1-580-843-11	PIN, CONNECTOR (POWER)			
CN7603	1-695-915-11	TAB (CONTACT)			
		<DIODE>			
D7300	8-719-158-35	RD9.1S-B			
D7401	8-719-158-35	RD9.1S-B			
D7402	8-719-158-35	RD9.1S-B			
D7403	8-719-158-35	RD9.1S-B			
D7404	8-719-158-35	RD9.1S-B			
D7405	8-719-158-35	RD9.1S-B			
D7406	8-719-158-35	RD9.1S-B			
D7407	8-719-158-35	RD9.1S-B			
D7408	8-719-158-35	RD9.1S-B			
D7409	8-719-158-35	RD9.1S-B			
D7410	8-719-158-35	RD9.1S-B			
D7411	8-719-158-35	RD9.1S-B			

REF NO.	PART NO.	DESCRIPTION		REMARK
D7412	8-719-914-42	DA204K		
D7413	8-719-158-35	RD9.1S-B		
D7501	8-719-158-35	RD9.1S-B		
		<FUSE>		
F7601	⚠ 1-429-707-12	FUSE, TIME-LAG 5A/250V		
		<IC>		
IC7203	8-759-553-40	TDA7429S		
IC7204	8-759-100-96	UPC4558G2		
IC7501	8-759-009-07	MC14053BF		
		<JACK>		
J7402	1-778-388-11	JACK BLOCK, PIN 9P		
		<CHIP CONDUCTOR>		
JR7206	1-216-295-91	SHORT	0	
JR7208	1-216-295-91	SHORT	0	
JR7210	1-216-295-91	SHORT	0	
JR7211	1-216-295-91	SHORT	0	
JR7401	1-216-295-91	SHORT	0	
JR7403	1-216-295-91	SHORT	0	
JR7404	1-216-295-91	SHORT	0	
		<COIL>		
L7204	1-414-856-11	INDUCTOR	10UH	
L7301	1-414-189-31	INDUCTOR	100UH	
L7501	1-414-856-11	INDUCTOR	10UH	
L7506	1-414-857-11	INDUCTOR	100UH	
L7507	1-414-187-11	INDUCTOR	47UH	
L7508	1-414-187-11	INDUCTOR	47UH	
L7509	1-414-857-11	INDUCTOR	100UH	
L7510	1-414-187-11	INDUCTOR	47UH	
L7511	1-414-187-11	INDUCTOR	47UH	
L7512	1-414-856-11	INDUCTOR	10UH	
		<TRANSISTOR>		
Q7309	8-729-010-25	MSD601-RT1		
Q7310	8-729-010-25	MSD601-RT1		
Q7401	8-729-424-67	UN2216		
Q7402	8-729-424-67	UN2216		
Q7403	8-729-216-22	2SA1162-G		
Q7404	8-729-216-22	2SA1162-G		
Q7501	8-729-010-25	MSD601-RT1		
Q7502	8-729-216-22	2SA1162-G		
Q7503	8-729-010-25	MSD601-RT1		
Q7505	8-729-010-25	MSD601-RT1		
Q7507	8-729-216-22	2SA1162-G		
Q7509	8-729-010-25	MSD601-RT1		
Q7510	8-729-010-25	MSD601-RT1		
Q7511	8-729-216-22	2SA1162-G		
Q7514	8-729-010-25	MSD601-RT1		
Q7515	8-729-010-25	MSD601-RT1		
Q7516	8-729-216-22	2SA1162-G		
Q7520	8-729-010-25	MSD601-RT1		
Q7522	8-729-010-25	MSD601-RT1		
Q7523	8-729-216-22	2SA1162-G		

The components identified by shading and mark ⚠ are critical for safety.
Replace only with part number specified.

B9 C6

REF NO.	PART NO.	DESCRIPTION		REMARK	
		<RESISTOR>			
R7215	1-216-059-00	RES-CHIP	2.7K	5%	1/10W
R7216	1-216-059-00	RES-CHIP	2.7K	5%	1/10W
R7217	1-216-067-00	RES-CHIP	5.6K	5%	1/10W
R7218	1-216-067-00	RES-CHIP	5.6K	5%	1/10W
R7219	1-216-025-11	RES-CHIP	100	5%	1/10W
R7220	1-216-025-11	RES-CHIP	100	5%	1/10W
R7221	1-216-689-11	RES-CHIP	39K	5%	1/10W
R7222	1-216-689-11	RES-CHIP	39K	5%	1/10W
R7223	1-216-063-91	RES-CHIP	3.9K	5%	1/10W
R7224	1-216-073-91	RES-CHIP	10K	5%	1/10W
R7225	1-216-069-00	RES-CHIP	6.8K	5%	1/10W
R7226	1-216-069-00	RES-CHIP	6.8K	5%	1/10W
R7238	1-216-067-00	RES-CHIP	5.6K	5%	1/10W
R7239	1-216-067-00	RES-CHIP	5.6K	5%	1/10W
R7240	1-216-689-11	RES-CHIP	39K	5%	1/10W
R7241	1-216-067-00	RES-CHIP	5.6K	5%	1/10W
R7242	1-216-067-00	RES-CHIP	5.6K	5%	1/10W
R7243	1-216-689-11	RES-CHIP	39K	5%	1/10W
R7334	1-216-022-00	RES-CHIP	75	5%	1/10W
R7335	1-216-033-00	RES-CHIP	220	5%	1/10W
R7336	1-216-041-00	RES-CHIP	470	5%	1/10W
R7337	1-216-045-00	RES-CHIP	680	5%	1/10W
R7339	1-216-057-00	RES-CHIP	2.2K	5%	1/10W
R7341	1-216-045-00	RES-CHIP	680	5%	1/10W
R7342	1-216-049-11	RES-CHIP	1K	5%	1/10W
R7343	1-216-063-91	RES-CHIP	3.9K	5%	1/10W
R7344	1-216-073-91	RES-CHIP	10K	5%	1/10W
R7401	1-216-049-11	RES-CHIP	1K	5%	1/10W
R7402	1-216-073-91	RES-CHIP	10K	5%	1/10W
R7403	1-216-073-91	RES-CHIP	10K	5%	1/10W
R7404	1-216-073-91	RES-CHIP	10K	5%	1/10W
R7405	1-216-049-11	RES-CHIP	1K	5%	1/10W
R7406	1-216-073-91	RES-CHIP	10K	5%	1/10W
R7407	1-216-049-11	RES-CHIP	1K	5%	1/10W
R7408	1-216-049-11	RES-CHIP	1K	5%	1/10W
R7409	1-216-041-00	RES-CHIP	470	5%	1/10W
R7410	1-216-113-00	RES-CHIP	470K	5%	1/10W
R7411	1-216-113-00	RES-CHIP	470K	5%	1/10W
R7412	1-216-041-00	RES-CHIP	470	5%	1/10W
R7413	1-216-021-00	RES-CHIP	68	5%	1/10W
R7414	1-216-113-00	RES-CHIP	470K	5%	1/10W
R7415	1-216-113-00	RES-CHIP	470K	5%	1/10W
R7416	1-216-089-91	RES-CHIP	47K	5%	1/10W
R7417	1-216-089-91	RES-CHIP	47K	5%	1/10W
R7418	1-216-113-00	RES-CHIP	470K	5%	1/10W
R7419	1-216-022-00	RES-CHIP	75	5%	1/10W
R7420	1-216-113-00	RES-CHIP	470K	5%	1/10W
R7421	1-216-077-91	RES-CHIP	15K	5%	1/10W
R7422	1-216-077-91	RES-CHIP	15K	5%	1/10W
R7423	1-216-113-00	RES-CHIP	470K	5%	1/10W
R7424	1-216-022-00	RES-CHIP	75	5%	1/10W
R7425	1-216-033-00	RES-CHIP	220	5%	1/10W
R7426	1-216-033-00	RES-CHIP	220	5%	1/10W
R7427	1-216-089-91	RES-CHIP	47K	5%	1/10W
R7428	1-216-113-00	RES-CHIP	470K	5%	1/10W
R7429	1-216-089-91	RES-CHIP	47K	5%	1/10W
R7430	1-216-113-00	RES-CHIP	470K	5%	1/10W
R7503	1-216-025-11	RES-CHIP	100	5%	1/10W
R7504	1-216-025-11	RES-CHIP	100	5%	1/10W
R7506	1-216-025-11	RES-CHIP	100	5%	1/10W
R7507	1-216-081-00	RES-CHIP	22K	5%	1/10W
R7508	1-216-073-91	RES-CHIP	10K	5%	1/10W
R7511	1-216-033-00	RES-CHIP	220	5%	1/10W
R7512	1-216-005-00	RES-CHIP	15	5%	1/10W
R7515	1-216-041-00	RES-CHIP	470	5%	1/10W
R7516	1-216-025-11	RES-CHIP	100	5%	1/10W
R7517	1-216-075-00	RES-CHIP	12K	5%	1/10W
R7520	1-216-079-00	RES-CHIP	18K	5%	1/10W
R7522	1-216-049-11	RES-CHIP	1K	5%	1/10W
R7523	1-216-049-11	RES-CHIP	1K	5%	1/10W
R7528	1-216-033-00	RES-CHIP	220	5%	1/10W
R7529	1-216-053-00	RES-CHIP	1.5K	5%	1/10W
R7531	1-216-045-00	RES-CHIP	680	5%	1/10W
R7537	1-216-041-00	RES-CHIP	470	5%	1/10W
R7538	1-216-041-00	RES-CHIP	470	5%	1/10W
R7540	1-216-049-11	RES-CHIP	1K	5%	1/10W
R7541	1-216-041-00	RES-CHIP	470	5%	1/10W
R7542	1-216-041-00	RES-CHIP	470	5%	1/10W
R7543	1-216-049-11	RES-CHIP	1K	5%	1/10W
R7545	1-216-041-00	RES-CHIP	470	5%	1/10W
R7547	1-216-049-11	RES-CHIP	1K	5%	1/10W
R7548	1-216-025-11	RES-CHIP	100	5%	1/10W
R7549	1-216-075-00	RES-CHIP	12K	5%	1/10W
R7551	1-216-081-00	RES-CHIP	22K	5%	1/10W
R7552	1-216-049-11	RES-CHIP	1K	5%	1/10W
R7553	1-216-049-11	RES-CHIP	1K	5%	1/10W
R7554	1-216-033-00	RES-CHIP	220	5%	1/10W
R7556	1-216-049-11	RES-CHIP	1K	5%	1/10W
R7559	1-216-041-00	RES-CHIP	470	5%	1/10W
R7560	1-216-041-00	RES-CHIP	470	5%	1/10W
R7561	1-216-041-00	RES-CHIP	470	5%	1/10W
R7562	1-216-049-11	RES-CHIP	1K	5%	1/10W
R7563	1-216-041-00	RES-CHIP	470	5%	1/10W
R7566	1-216-041-00	RES-CHIP	470	5%	1/10W
R7567	1-216-049-11	RES-CHIP	1K	5%	1/10W
R7568	1-216-041-00	RES-CHIP	470	5%	1/10W
R7569	1-216-049-11	RES-CHIP	1K	5%	1/10W
R7601	⚠ 1-202-885-91	SOLID	1M	10%	1/2W
		<TRANSFORMER>			
T7601	1-424-505-11	TRANSFORMER, LINE FILTER			
T7602	1-431-182-11	TRANSFORMER, LINE FILTER			

****

*	A-1332-152-A	C6 BOARD MOUNTED ********************			
	4-352-844-01	PIN, LEAD, COATING			
	4-382-854-11	SCREW (M3X10), P, SW (+)			
		<CAPACITOR>			
C701	1-115-350-51	CERAMIC	0.0047UF		2KV
C702	1-102-074-00	CERAMIC	0.001UF	10.00%	50V
C708	1-102-114-00	CERAMIC	470PF	10.00%	50V
C709	1-102-114-00	CERAMIC	470PF	10.00%	50V
C710	1-102-114-00	CERAMIC	470PF	10.00%	50V
C712	1-102-115-00	CERAMIC	560PF	10.00%	50V
C713	1-102-112-00	CERAMIC	330PF	10.00%	50V

The components identified by shading and mark ⚠ are critical for safety. Replace only with part number specified.

C6

REF NO.	PART NO.	DESCRIPTION		REMARK	
C714	1-102-112-00	CERAMIC	330PF	10.00%	50V
C716	1-126-933-11	ELECT	100UF	20.00%	16V
C717	1-107-651-11	ELECT	4.7UF	20.00%	250V
C718	1-102-106-00	CERAMIC	100PF	10.00%	50V
C1800	1-126-964-11	ELECT	10UF	20.00%	50V
C1803	1-126-964-11	ELECT	10UF	20.00%	50V
C1804	1-126-964-11	ELECT	10UF	20.00%	50V
C1809	1-126-942-61	ELECT	1000UF	20.00%	25V
C1810	1-102-106-00	CERAMIC	100PF	10.00%	50V
		<CONNECTOR>			
CN700	1-695-915-11	TAB (CONTACT)			
CN702	1-695-915-11	TAB (CONTACT)			
CN703	* 1-564-509-11	PLUG, CONNECTOR 6P			
CN704	1-695-915-11	TAB (CONTACT)			
CN712	1-564-507-11	PLUG, CONNECTOR 4P			
CN1801	* 1-564-509-11	PLUG, CONNECTOR 6P			
CN1802	* 1-564-506-11	PLUG, CONNECTOR 3P			
		<DIODE>			
D701	8-719-911-19	1SS119-25			
D702	8-719-911-19	1SS119-25			
D703	8-719-911-19	1SS119-25			
D704	8-719-911-19	1SS119-25			
D705	8-719-911-19	1SS119-25			
D706	8-719-911-19	1SS119-25			
D707	8-719-911-19	1SS119-25			
D708	8-719-911-19	1SS119-25			
D709	8-719-911-19	1SS119-25			
D710	8-719-911-19	1SS119-25			
D711	8-719-911-19	1SS119-25			
D712	8-719-911-19	1SS119-25			
D716	8-719-911-19	1SS119-25			
D717	8-719-070-16	NNCD9.1A-T1			
D1803	8-719-911-19	1SS119-25			
D1804	8-719-911-19	1SS119-25			
D1808	8-719-908-03	GP08D			
		<IC>			
IC1800	8-759-822-38	LA6510			
		<JACK>			
J701	⚠ 1-540-071-22	SOCKET, CRT			
		<COIL>			
L701	1-410-667-31	INDUCTOR	22UH		
L703	1-414-186-31	INDUCTOR	33UH		
L705	1-414-186-31	INDUCTOR	33UH		
L707	1-414-187-11	INDUCTOR	47UH		
		<TRANSISTOR>			
Q701	8-729-326-11	2SC2611			
Q702	8-729-326-11	2SC2611			
Q703	8-729-326-11	2SC2611			

REF NO.	PART NO.	DESCRIPTION		REMARK	
Q704	8-729-326-11	2SC2611			
Q705	8-729-326-11	2SC2611			
Q706	8-729-326-11	2SC2611			
Q707	8-729-200-17	2SA1091-O			
Q708	8-729-200-17	2SA1091-O			
Q709	8-729-200-17	2SA1091-O			
Q710	8-729-119-78	2SC2785-HFE			
Q711	8-729-119-78	2SC2785-HFE			
Q712	8-729-119-78	2SC2785-HFE			
Q714	8-729-255-12	2SC2551-O			
Q1800	8-729-119-76	2SA1175-HFE			
Q1802	8-729-119-78	2SC2785-HFE			
		<RESISTOR>			
R701	1-219-752-11	CARBON	100K	5%	1/2W
R705	1-216-392-11	METAL OXIDE	1.8	5%	3W
R710	1-215-923-00	METAL OXIDE	10K	5%	3W
R711	1-260-328-11	CARBON	1K	5%	1/2W
R712	1-215-923-00	METAL OXIDE	10K	5%	3W
R713	1-260-330-11	CARBON	1.5K	5%	1/2W
R714	1-215-923-00	METAL OXIDE	10K	5%	3W
R715	1-260-330-11	CARBON	1.5K	5%	1/2W
R716	1-249-405-11	CARBON	100	5%	1/4W
R717	1-249-405-11	CARBON	100	5%	1/4W
R718	1-249-405-11	CARBON	100	5%	1/4W
R719	1-215-469-00	METAL	100K	1%	1/4W
R720	1-249-923-11	CARBON	1K	5%	1/4W
R722	1-249-923-11	CARBON	1K	5%	1/4W
R723	1-215-469-00	METAL	100K	1%	1/4W
R724	1-249-923-11	CARBON	1K	5%	1/4W
R725	1-249-424-11	CARBON	3.9K	5%	1/4W
R726	1-249-424-11	CARBON	3.9K	5%	1/4W
R727	1-249-424-11	CARBON	3.9K	5%	1/4W
R728	1-249-408-11	CARBON	180	5%	1/4W
R729	1-249-408-11	CARBON	180	5%	1/4W
R730	1-249-408-11	CARBON	180	5%	1/4W
R731	1-249-401-11	CARBON	47	5%	1/4W
R732	1-249-401-11	CARBON	47	5%	1/4W
R733	1-249-401-11	CARBON	47	5%	1/4W
R734	1-219-743-11	CARBON	100	5%	1/2W
R738	1-247-807-31	CARBON	100	5%	1/4W
R739	1-247-807-31	CARBON	100	5%	1/4W
R740	1-247-807-31	CARBON	100	5%	1/4W
R747	1-215-926-00	METAL OXIDE	33K	5%	3W
R749	1-215-927-00	METAL OXIDE	47K	5%	3W
R751	1-215-926-00	METAL OXIDE	33K	5%	3W
R753	1-249-429-11	CARBON	10K	5%	1/4W
R755	1-249-427-11	CARBON	6.8K	5%	1/4W
R756	1-249-427-11	CARBON	6.8K	5%	1/4W
R757	1-249-427-11	CARBON	6.8K	5%	1/4W
R758	1-249-419-11	CARBON	1.5K	5%	1/4W
R759	1-249-419-11	CARBON	1.5K	5%	1/4W
R760	1-249-419-11	CARBON	1.5K	5%	1/4W
R1800	1-249-417-11	CARBON	1K	5%	1/4W
R1801	1-249-426-11	CARBON	5.6K	5%	1/4W
R1802	1-249-382-11	CARBON	1.2	5%	1/4W
R1803	1-249-382-11	CARBON	1.2	5%	1/4W
R1805	1-249-429-11	CARBON	10K	5%	1/4W
R1806	1-249-425-11	CARBON	4.7K	5%	1/4W
R1808	1-249-425-11	CARBON	4.7K	5%	1/4W
R1809	1-249-435-11	CARBON	33K	5%	1/4W

C6 D3 H5

REF NO.	PART NO.	DESCRIPTION		REMARK	
R1810	1-249-435-11	CARBON	33K	5%	1/4W
R1811	1-249-433-11	CARBON	22K	5%	1/4W
R1812	1-249-435-11	CARBON	33K	5%	1/4W
R1821	1-249-433-11	CARBON	22K	5%	1/4W
R1822	1-249-435-11	CARBON	33K	5%	1/4W
R1823	1-249-426-11	CARBON	5.6K	5%	1/4W
R1824	1-249-435-11	CARBON	33K	5%	1/4W
R1825	1-247-843-11	CARBON	3.3K	5%	1/4W

<VARIABLE RESISTOR>

REF NO.	PART NO.	DESCRIPTION
RV702	1-241-656-11	RES, ADJ, METAL FILM 110M
RV1801	1-238-019-11	RES, ADJ, CARBON 47K

****

* A-1400-167-A D3 BOARD MOUNTED
****

<CAPACITOR>

REF NO.	PART NO.	DESCRIPTION		REMARK	
C2800	1-126-947-11	ELECT	47UF	20.00%	25V
C2801	1-106-220-00	MYLAR	0.1UF	10.00%	100V
C2802	1-136-155-00	FILM	0.015UF	5.00%	50V
C2803	1-129-723-00	FILM	0.056UF	5.00%	630V
C2805	1-126-947-11	ELECT	47UF	20.00%	25V
C2806	1-106-383-00	MYLAR	0.047UF	5.00%	100V
C2807	1-137-194-81	FILM	0.47UF	5.00%	50V
C2808	1-126-964-11	ELECT	10UF	20.00%	50V
C2809	1-137-194-81	FILM	0.47UF	5.00%	50V
C2810	1-106-375-12	MYLAR	0.022UF	10.00%	250V
C2811	1-126-964-11	ELECT	10UF	20.00%	50V
C2812	1-126-964-11	ELECT	10UF	20.00%	50V
C2813	1-129-708-91	FILM	0.0033UF	5.00%	630V

<CONNECTOR>

REF NO.	PART NO.	DESCRIPTION
CN2800	* 1-564-510-11	PLUG, CONNECTOR 7P
CN2802	* 1-564-506-11	PLUG, CONNECTOR 3P
CN2803	1-695-915-11	TAB (CONTACT)

<DIODE>

REF NO.	PART NO.	DESCRIPTION
D2800	8-719-302-43	EL1Z
D2801	8-719-911-19	1SS119-25
D2802	8-719-911-19	1SS119-25
D2803	8-719-911-19	1SS119-25

<IC>

REF NO.	PART NO.	DESCRIPTION
IC2800	8-759-701-59	NJM78M09FA
IC2801	8-759-998-98	LM358D

<COIL>

REF NO.	PART NO.	DESCRIPTION	
L2800	1-406-989-71	INDUCTOR	0UH
L2802	1-406-987-21	INDUCTOR	4.7MH
L2803	1-406-986-21	INDUCTOR	3.3UH
L2804	1-406-678-11	INDUCTOR	15MH

<TRANSISTOR>

REF NO.	PART NO.	DESCRIPTION
Q2800	8-729-119-78	2SC2785-HFE
Q2801	8-729-195-82	2SC2958
Q2802	8-729-017-06	2SC4793
Q2803	8-729-216-22	2SA1162-G
Q2804	8-729-010-25	MSD601-RT1

<RESISTOR>

REF NO.	PART NO.	DESCRIPTION		REMARK	
R2800	1-249-405-11	CARBON	100	5%	1/4W
R2802	1-260-111-11	CARBON	10K	5%	1/2W
R2803	1-260-111-11	CARBON	10K	5%	1/2W
R2804	1-216-061-91	RES-CHIP	3.3K	5%	1/10W
R2805	1-216-097-11	RES-CHIP	100K	5%	1/10W
R2806	1-249-421-11	CARBON	2.2K	5%	1/4W
R2807	1-249-420-11	CARBON	1.8K	5%	1/4W
R2808	1-215-857-71	METAL OXIDE	10	5%	1W
R2809	1-216-059-00	RES-CHIP	2.7K	5%	1/10W
R2810	1-216-049-11	RES-CHIP	1K	5%	1/10W
R2811	1-216-069-00	RES-CHIP	6.8K	5%	1/10W
R2812	1-216-081-00	RES-CHIP	22K	5%	1/10W
R2813	1-216-059-00	RES-CHIP	2.7K	5%	1/10W
R2814	1-216-121-11	RES-CHIP	1M	5%	1/10W
R2815	1-216-085-91	RES-CHIP	33K	5%	1/10W
R2816	1-216-107-00	RES-CHIP	270K	5%	1/10W
R2817	1-216-107-00	RES-CHIP	270K	5%	1/10W

<TRANSFORMER>

REF NO.	PART NO.	DESCRIPTION
T2800	1-413-059-00	TRANSFORMER, FERRITE (DFT)

****

* A-1377-085-A H5 BOARD MOUNTED
****

* 4-055-304-01 HOLDER, LED

<CAPACITOR>

REF NO.	PART NO.	DESCRIPTION		REMARK	
C3910	1-126-947-11	ELECT	47UF	20.00%	16V
C3911	1-126-947-11	ELECT	47UF	20.00%	16V
C3912	1-102-114-00	CERAMIC	470PF	10.00%	50V

<CONNECTOR>

REF NO.	PART NO.	DESCRIPTION
CN3601	* 1-580-844-11	PIN, CONNECTOR (POWER)
CN3602	* 1-580-844-11	PIN, CONNECTOR (POWER)
CN3901	* 1-564-507-11	PLUG, CONNECTOR 4P
CN3902	1-564-509-11	PLUG, CONNECTOR 6P
CN3904	* 1-564-512-11	PLUG, CONNECTOR 9P
CN3905	* 1-564-512-11	PLUG, CONNECTOR 9P

<DIODE>

REF NO.	PART NO.	DESCRIPTION
D3905	8-719-070-16	NNCD9.1A-T1
D3906	8-719-045-19	SPB-26MVWF
D3908	8-719-070-16	NNCD9.1A-T1

The components identified by shading and mark ⚠ are critical for safety.
Replace only with part number specified.

V1 **J4** **H5**

REF NO.	PART NO.	DESCRIPTION	REMARK		
		<IC>			
IC3901	8-742-225-20	IC SBX3081-21			
		<JACK>			
J3901	1-750-264-11	JACK			
J3903	1-770-329-11	JACK, PIN 3P			
		<TRANSISTOR>			
Q3901	8-729-030-02	DTC144ESA			
Q3902	8-729-030-02	DTC144ESA			
		<RESISTOR>			
R3907	1-249-426-11	CARBON	5.6K	5%	1/4W
R3908	1-249-413-11	CARBON	470	5%	1/4W
R3909	1-249-417-11	CARBON	1K	5%	1/4W
R3910	1-249-420-11	CARBON	1.8K	5%	1/4W
R3911	1-249-411-11	CARBON	330	5%	1/4W
R3912	1-247-843-11	CARBON	3.3K	5%	1/4W
R3913	1-249-429-11	CARBON	10K	5%	1/4W
R3914	1-249-411-11	CARBON	330	5%	1/4W
R3915	1-249-429-11	CARBON	10K	5%	1/4W
R3916	1-249-401-11	CARBON	47	5%	1/4W
R3920	1-247-807-31	CARBON	100	5%	1/4W
R3921	1-247-807-31	CARBON	100	5%	1/4W
		<SWITCH>			
S3601	⚠ 1-571-433-31	SWITCH, PUSH (AC POWER)			
S3902	1-692-431-21	SWITCH, TACTILE			
S3903	1-692-431-21	SWITCH, TACTILE			
S3904	1-692-431-21	SWITCH, TACTILE			
S3905	1-692-431-21	SWITCH, TACTILE			
S3906	1-692-431-21	SWITCH, TACTILE			
S3907	1-692-431-21	SWITCH, TACTILE			
S3908	1-692-431-21	SWITCH, TACTILE			

****

* A-1388-338-A J4 BOARD MOUNTED
****

REF NO.	PART NO.	DESCRIPTION	REMARK		
		<CAPACITOR>			
C2410	1-126-967-11	ELECT	47UF	20.00%	50V
C2411	1-126-967-11	ELECT	47UF	20.00%	50V
C2412	1-126-967-11	ELECT	47UF	20.00%	50V
C2413	1-102-112-00	CERAMIC	330PF	10.00%	50V
C2414	1-102-112-00	CERAMIC	330PF	10.00%	50V
C2418	1-126-960-11	ELECT	1UF	20.00%	50V
C2419	1-126-960-11	ELECT	1UF	20.00%	50V
		<CONNECTOR>			
CN2410	* 1-564-523-11	PLUG, CONNECTOR 8P			
		<DIODE>			
D2410	8-719-929-15	HZS9.1NB2			
D2411	8-719-929-15	HZS9.1NB2			
D2412	8-719-929-15	HZS9.1NB2			
D2414	8-719-929-15	HZS9.1NB2			
D2415	8-719-929-15	HZS9.1NB2			
		<JACK>			
J2410	1-784-623-11	BLOCK, PIN JACK 5P			
		<RESISTOR>			
R2410	1-247-804-11	CARBON	75	5%	1/4W
R2411	1-247-804-11	CARBON	75	5%	1/4W
R2412	1-247-804-11	CARBON	75	5%	1/4W
R2414	1-247-887-00	CARBON	220K	5%	1/4W
R2415	1-249-431-11	CARBON	15K	5%	1/4W
R2417	1-247-887-00	CARBON	220K	5%	1/4W
R2418	1-249-431-11	CARBON	15K	5%	1/4W
R2419	1-249-409-11	CARBON	220	5%	1/4W
R2420	1-249-409-11	CARBON	220	5%	1/4W
R2421	1-249-409-11	CARBON	220	5%	1/4W

****

* A-1347-164-A V1 BOARD COMPLETE (KV-XJ29M61 ONLY)
****

REF NO.	PART NO.	DESCRIPTION	REMARK		
		<CAPACITOR>			
C801	1-126-947-11	ELECT	47UF	20.00%	16V
C805	1-163-038-91	CERAMIC CHIP	0.1UF		25V
C806	1-163-038-91	CERAMIC CHIP	0.1UF		25V
C814	1-163-021-91	CERAMIC CHIP	0.01UF	10.00%	50V
C815	1-163-251-11	CERAMIC CHIP	100PF	5.00%	50V
C816	1-164-505-11	CERAMIC CHIP	2.2UF		16V
C817	1-164-004-11	CERAMIC CHIP	0.1UF	10.00%	25V
C818	1-163-239-11	CERAMIC CHIP	33PF	5.00%	50V
C820	1-163-239-11	CERAMIC CHIP	33PF	5.00%	50V
C821	1-163-038-91	CERAMIC CHIP	0.1UF		25V
C822	1-163-009-91	CERAMIC CHIP	0.001UF	10.00%	50V
C823	1-126-933-11	ELECT	100UF	20.00%	16V
C826	1-126-963-11	ELECT	4.7UF	20.00%	50V
C829	1-163-247-91	CERAMIC CHIP	68PF	5.00%	50V
C830	1-163-038-91	CERAMIC CHIP	0.1UF		25V
C831	1-126-933-11	ELECT	100UF	20.00%	16V
C832	1-126-964-11	ELECT	10UF	20.00%	50V
C835	1-163-038-91	CERAMIC CHIP	0.1UF		25V
C837	1-126-933-11	ELECT	100UF	20.00%	16V
		<CONNECTOR>			
CN801	* 1-774-812-11	CONNECTOR, BOARD TO BOARD 7P			
CN803	* 1-774-812-11	CONNECTOR, BOARD TO BOARD 7P			
		<DIODE>			
D802	8-719-941-09	DAP202U			
D803	8-719-105-46	RD3.3M-B2			
D804	8-719-105-91	RD5.6M-B2			

The components identified by shading and mark ⚠ are critical for safety.
Replace only with part number specified.

V1 VM1

<FERRITE BEAD>

REF NO.	PART NO.	DESCRIPTION	REMARK		
FB801	1-410-397-21	FERRITE	1.1UH		
FB802	1-410-397-21	FERRITE	1.1UH		
FB803	1-410-397-21	FERRITE	1.1UH		
FB804	1-414-223-11	INDUCTOR	470UH		
FB805	1-410-397-21	FERRITE	1.1UH		

<IC>

REF NO.	PART NO.	DESCRIPTION	REMARK
IC801	8-759-476-87	SAA5261	

<CHIP CONDUCTOR>

REF NO.	PART NO.	DESCRIPTION	REMARK
JR800	1-216-295-91	SHORT	0
JR801	1-216-295-91	SHORT	0
JR802	1-216-295-91	SHORT	0
JR804	1-216-295-91	SHORT	0
JR805	1-216-295-91	SHORT	0

<TRANSISTOR>

REF NO.	PART NO.	DESCRIPTION	REMARK
Q801	8-729-120-28	2SC1623-L5L6	
Q803	8-729-120-28	2SC1623-L5L6	
Q805	8-729-120-28	2SC1623-L5L6	
Q806	8-729-120-28	2SC1623-L5L6	
Q807	8-729-120-28	2SC1623-L5L6	
Q808	8-729-120-28	2SC1623-L5L6	
Q810	8-729-120-28	2SC1623-L5L6	
Q811	8-729-019-01	2SD2394-EF	
Q817	8-729-421-22	UN2211	

<RESISTOR>

REF NO.	PART NO.	DESCRIPTION	REMARK		
R800	1-208-806-11	METAL CHIP	10K	0.5%	1/10W
R801	1-216-295-91	SHORT	0		
R802	1-216-025-11	RES-CHIP	100	5%	1/10W
R803	1-216-295-91	SHORT	0		
R804	1-216-295-91	SHORT	0		
R805	1-216-295-91	SHORT	0		
R807	1-216-295-91	SHORT	0		
R813	1-216-295-91	SHORT	0		
R820	1-216-073-91	RES-CHIP	10K	5%	1/10W
R821	1-216-083-00	RES-CHIP	27K	5%	1/10W
R822	1-216-025-11	RES-CHIP	100	5%	1/10W
R824	1-216-295-91	SHORT	0		
R825	1-216-295-91	SHORT	0		
R827	1-216-295-91	SHORT	0		
R828	1-216-025-11	RES-CHIP	100	5%	1/10W
R829	1-216-025-11	RES-CHIP	100	5%	1/10W
R830	1-216-295-91	SHORT	0		
R831	1-216-295-91	SHORT	0		
R832	1-208-790-11	METAL CHIP	2.2K	0.5%	1/10W
R835	1-216-295-91	SHORT	0		
R839	1-216-655-11	METAL CHIP	1.5K	0.5%	1/10W
R841	1-216-025-11	RES-CHIP	100	5%	1/10W
R842	1-216-065-91	RES-CHIP	4.7K	5%	1/10W
R843	1-216-065-91	RES-CHIP	4.7K	5%	1/10W
R844	1-216-057-00	RES-CHIP	2.2K	5%	1/10W
R845	1-216-049-11	RES-CHIP	1K	5%	1/10W
R846	1-216-049-11	RES-CHIP	1K	5%	1/10W
R847	1-216-049-11	RES-CHIP	1K	5%	1/10W
R848	1-216-049-11	RES-CHIP	1K	5%	1/10W
R849	1-216-049-11	RES-CHIP	1K	5%	1/10W
R850	1-216-105-91	RES-CHIP	220K	5%	1/10W
R851	1-216-057-00	RES-CHIP	2.2K	5%	1/10W
R853	1-216-067-00	RES-CHIP	5.6K	5%	1/10W
R857	1-216-077-91	RES-CHIP	15K	5%	1/10W
R861	1-216-049-11	RES-CHIP	1K	5%	1/10W
R862	1-260-095-11	CARBON	470	5%	1/2W
R863	1-216-049-11	RES-CHIP	1K	5%	1/10W
R864	1-216-041-00	RES-CHIP	470	5%	1/10W
R866	1-215-880-00	METAL OXIDE	10	5%	2W
R871	1-216-037-00	RES-CHIP	330	5%	1/10W
R879	1-216-073-91	RES-CHIP	10K	5%	1/10W
R880	1-216-041-00	RES-CHIP	470	5%	1/10W
R882	1-216-049-11	RES-CHIP	1K	5%	1/10W
R884	1-216-025-11	RES-CHIP	100	5%	1/10W

<CRYSTAL>

REF NO.	PART NO.	DESCRIPTION	REMARK
X801	1-578-774-11	VIBRATOR, CRYSTAL	

****

* A-1400-168-A VM1 BOARD MOUNTED
****

4-382-854-11 SCREW (M3X10), P, SW (+)

<CAPACITOR>

REF NO.	PART NO.	DESCRIPTION	REMARK		
C5902	1-104-661-91	ELECT	330UF	20.00%	16V
C5903	1-161-830-00	CERAMIC	0.0047UF		500V
C5905	1-126-935-11	ELECT	470UF	20.00%	10V
C5906	1-130-491-00	MYLAR	0.047UF	5.00%	50V
C5907	1-107-638-11	ELECT	33UF	20.00%	160V
C5908	1-106-383-00	MYLAR	0.047UF	10.00%	200V
C5909	1-126-933-11	ELECT	100UF	20.00%	16V
C5910	1-130-471-00	MYLAR	0.001UF	5.00%	50V
C5911	1-107-949-11	ELECT	2.2UF	20.00%	160V
C5912	1-104-999-11	MYLAR	0.1UF	10.00%	200V
C5913	1-130-471-00	MYLAR	0.001UF	5.00%	50V
C5914	1-126-933-11	ELECT	100UF	20.00%	16V
C5916	1-130-491-00	MYLAR	0.047UF	5.00%	50V
C5917	1-126-935-11	ELECT	470UF	20.00%	10V
C5918	1-115-341-51	CERAMIC	120PF	10.00%	500V
C5920	1-126-964-11	ELECT	10UF	20.00%	50V
C5921	1-102-852-91	CERAMIC	47PF	5.00%	50V

<CONNECTOR>

REF NO.	PART NO.	DESCRIPTION	REMARK
CN2801	* 1-564-506-11	PLUG, CONNECTOR 3P	
CN5901	* 1-564-510-11	PLUG, CONNECTOR 7P	
CN5904	* 1-770-723-11	CONNECTOR, BOARD TO BOARD 8P	

<DIODE>

REF NO.	PART NO.	DESCRIPTION	REMARK		
D5901	8-719-911-19	1SS119-25			
D5902	8-719-110-88	RD39ES-B2			
D5903	8-719-911-19	1SS119-25			
D5904	8-719-110-88	RD39ES-B2			
D5905	8-719-911-19	1SS119-25			
D5906	1-249-406-11	CARBON	120	5%	1/4W
D5907	1-249-406-11	CARBON	120	5%	1/4W

The components identified by shading and mark ⚠ are critical for safety. Replace only with part number specified.

VM1

REF NO.	PART NO.	DESCRIPTION			REMARK
		<COIL>			
L5901	1-414-187-11	INDUCTOR	47UH		
L5902	1-414-856-11	INDUCTOR	10UH		
		<TRANSISTOR>			
Q5901	8-729-230-45	2SC2458-YGR			
Q5902	8-729-809-26	2SA1606-E			
Q5903	8-729-230-45	2SC2458-YGR			
Q5904	8-729-119-76	2SA1175-HFE			
Q5905	8-729-230-45	2SC2458-YGR			
Q5906	8-729-809-29	2SC4159-E			
Q5908	8-729-119-78	2SC2785-HFE			
Q5909	8-729-119-78	2SC2785-HFE			
		<RESISTOR>			
R5901	1-249-409-11	CARBON	220	5%	1/4W
R5902	1-249-414-11	CARBON	560	5%	1/4W
R5903	1-247-734-11	CARBON	39	5%	1/2W
R5904	1-249-411-11	CARBON	330	5%	1/4W
R5905	1-249-417-11	CARBON	1K	5%	1/4W
R5906	1-249-417-11	CARBON	1K	5%	1/4W
R5907	1-249-417-11	CARBON	1K	5%	1/4W
R5908	1-249-383-11	CARBON	1.5	5%	1/4W
R5909	1-249-409-11	CARBON	220	5%	1/4W
R5910	1-249-403-11	CARBON	68	5%	1/4W
R5911	1-249-439-11	CARBON	68K	5%	1/4W
R5912	1-249-437-11	CARBON	47K	5%	1/4W
R5914	1-249-403-11	CARBON	68	5%	1/4W
R5915	1-249-429-11	CARBON	10K	5%	1/4W
R5916	1-249-419-11	CARBON	1.5K	5%	1/4W
R5917	1-249-416-11	CARBON	820	5%	1/4W
R5918	1-249-429-11	CARBON	10K	5%	1/4W
R5919	1-249-417-11	CARBON	1K	5%	1/4W
R5920	1-249-439-11	CARBON	68K	5%	1/4W
R5921	1-216-476-11	METAL OXIDE	180	5%	3W
R5922	1-249-414-11	CARBON	560	5%	1/4W
R5923	1-249-383-11	CARBON	1.5	5%	1/4W
R5925	1-249-400-11	CARBON	39	5%	1/4W
R5929	1-215-880-00	METAL OXIDE	10	5%	2W
R5930	1-249-413-11	CARBON	470	5%	1/4W
R5931	1-249-413-11	CARBON	470	5%	1/4W
R5932	1-249-413-11	CARBON	470	5%	1/4W
R5933	1-249-413-11	CARBON	470	5%	1/4W
R5934	1-249-430-11	CARBON	12K	5%	1/4W
R5935	1-249-429-11	CARBON	10K	5%	1/4W

****

ACCESSORIES AND PACKING MATERIALS
****

	PART NO.	DESCRIPTION
	3-701-910-00	SCREW, SPECIAL (DIA. 3.8X20)
*	4-029-168-01	BAG, PROTECTION
*	4-054-319-01	TRAY
	4-065-210-01	JOINT
*	4-071-224-01	CUSHION (LOWER)(ASSY)
*	4-071-225-01	CUSHION (UPPER)(ASSY)
*	4-072-935-01	INDIVIDUAL CARTON
	4-392-003-11	BAND, HOLD
	4-392-004-11	CLIP

****

REMOTE COMMANDER
****

PART NO.	DESCRIPTION
1-418-163-51	REMOTE COMMANDER (RM-952)
9-939-697-01	BATTERY REMOTE COMMANDER

Sony Corporation
Sony Technology Malaysia Sdn. Bhd.
Visual Products General Area

9-872-268-01

English
© 2001.10